A LOOK AT THE YAQIN MC-100B

By Les Carpenter G4CNH – July 2022

This is the Authors 100B fitted with Full Music 6SN7 (Gold Band) and Full Music 12AX7, later replaced with Brimar boxed anode CV4004 military spec. 12AX7's. He has since replaced the KT88's with KT90EH which appear more stable with bias voltages and they sound very good too.

He thanks Bob Drinkall and other contributors for helping to make this document.

INDEX

This is more than just an entry level amplifier; using a pair of KT88's in Push-Pull on each channel it has plenty of power to drive all but the most in-efficient speakers. It is dual mono-block in design, that is to say, it has separate power supplies for each channel and only the bias circuit is shared, this being derived from the Left hand channel power transformer. Switches on the top plate allow the amplifier to run either in Triode mode or Ultra Linear mode though the Author prefers Ultra Linear many like Triode instead. There are some bad points to the amp but these are easily corrected.

Bad points:

One very noticeable feature is the front panel toggle switch, used to select either the adjacent RCA sockets (0.6V) or any of the four 0.25V inputs on the rear panel, as selected by the right hand rotary switch. The toggle switch is a little confusing as it gives the impression that it by-passes the input stages and drives the 6SN7's directly. **THIS IS NOT THE CASE!** There isn't even an input attenuator to take the 0.6V input down to the 0.25V levels expected on the other four rear connectors. What the switch does is just apply more negative feedback inside the amplifier to reduce its gain as a form of compensation, not exactly the most succinct way of doing this, after all the negative feedback should already be optimised for best performance? The Author regards these inputs as just a sales gimmick but OK, that is a personal thing.

110V/220V Operation, as with most Chinese equipment you may find 110V or 220V is too low for your local power supplies. Make sure when you order that you insist on 120, 230V, 240V or whatever you require, it may take a little longer for the factory to fit the necessary transformers but the wait will be worthwhile.
We will cover other aspects as we go and where others have applied modifications to make the 100B even better!

Original Yaqin schematic.

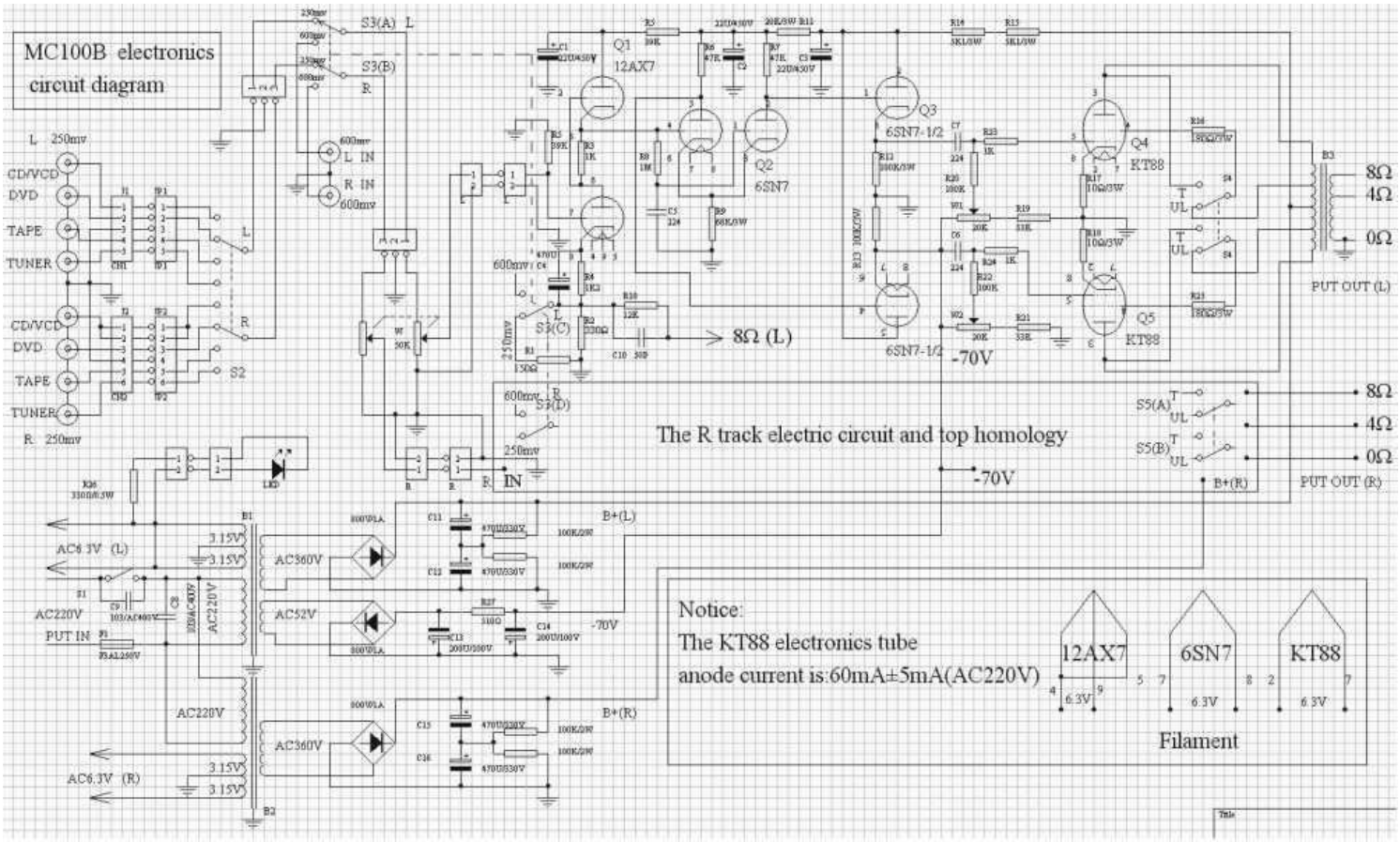

Input circuit-redrawn.

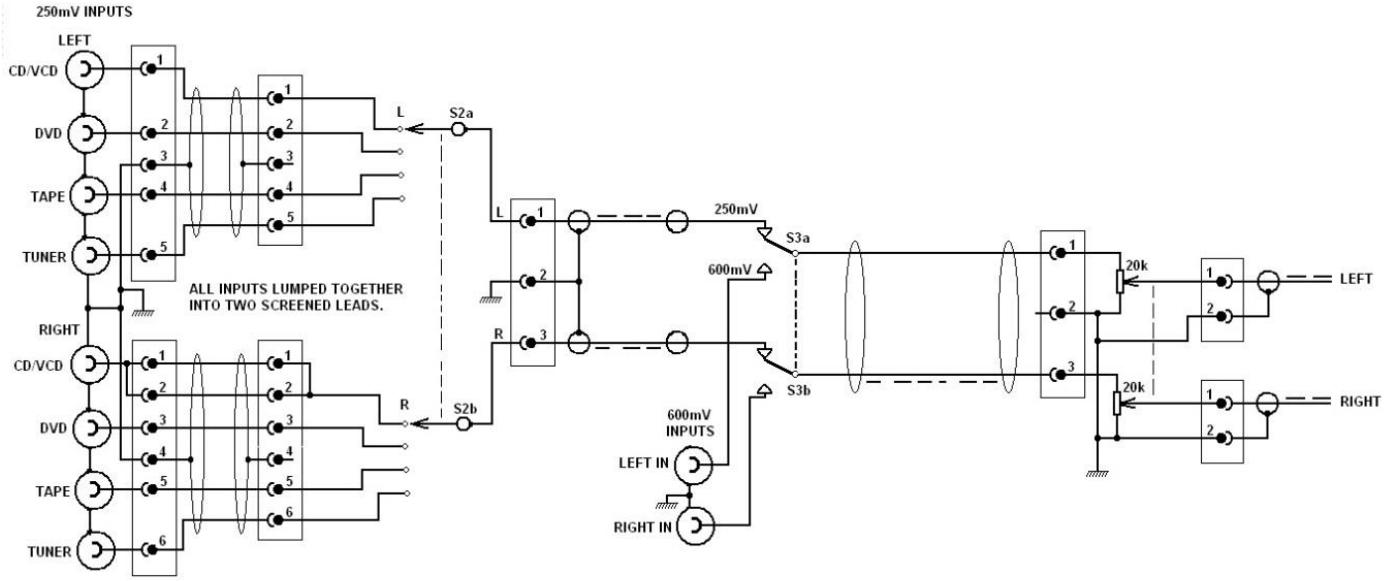

The Author has never liked the way all of the inputs are lumped together with just one overall screen. He had cross talk with a similar arrangement on his Yaqin MC10L and now uses just one input from an external selection box with motorised volume control, with the MC-100B volume control set to maximum.

Removing Base Plate - text and photos by Bob Drinkall.

First remove all tubes for safety and label each with what socket they came from.
Remove the bottom cover and it's at this stage I hope you have an electric screw driver for removing all the screws/bolts. The type of screws may vary between serial numbers so map out what type of screw it is as you remove them; first remove all the rubber feet.

M4 x 5mm MACHINE SCREW (18)

M3 x 11mm SELF TAP (14)

M4 x 15 mm SELF TAP
FOOT SECURING SCREW

SCREW TYPES MAY VARY BETWEEN UNITS.

Re-draw of circuit with component identifiers added.

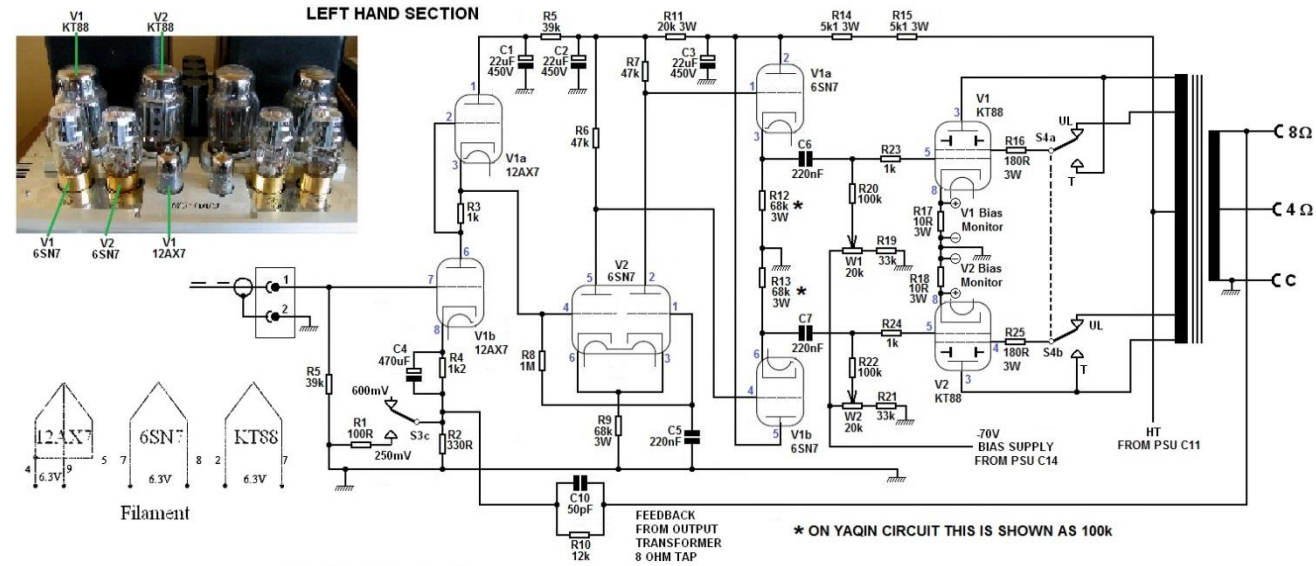

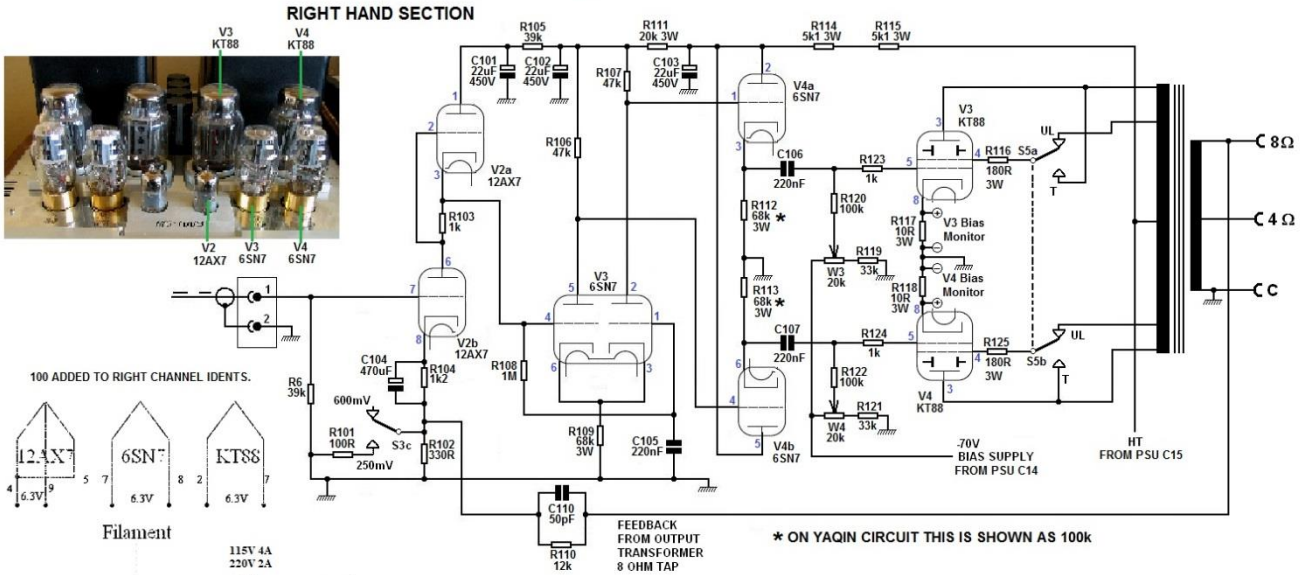

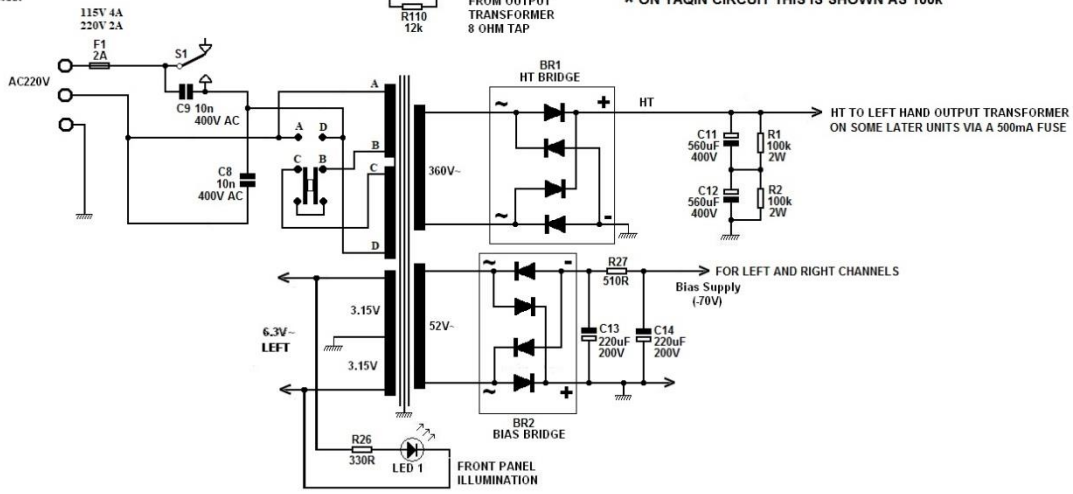

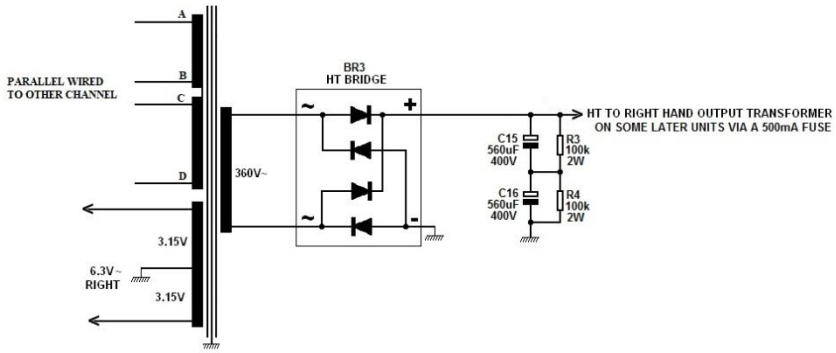

The first stages comprising of the 12AX7's V1 and V2, form a SRPP circuit and directly couple to the phase splitter 6SN7's V2 and V3. If you want any more info on the front end circuits then I recommend reading the Valve Wizards excellent article to be found at :-
www.valvewizard.co.uk/SRPP_Blencowe.pdf

These circuits have been well used by Yaqin, even the long tail pair splitters, but there is an exception here in that both anode resistors (R6, R7 & R106, R107) are the same value at 47k. Text books will tell you that to obtain the same amplitude outputs to drive the output stage will require R7 and R107 to be slightly higher, around 51k, the MC10L for example uses these values. Checks on this have found that any errors are not as severe as that of variance in valve gains so the present values have been kept.

Coupling Capacitors and a Guide for replacement, text and photos by Bob Drinkall

The coupling caps on the 100b are 0.47uf at (500v min) C6, C7, C106 & C107), early 100b's used 0.22uf, but 0.47uf can be fitted. On newer 100b's Yaqin have changed the cap voltage to 630v instead of 500v, so use 630v caps if you can, if not 500v should be OK.

Before doing the work leave amp unused for 30 minutes min, so power caps drain.

First remove all the valves noting which socket the KT88's came from as this will save re-biasing when they are replaced. Turn the amp upside down onto a soft cloth, remove the most outer bolts & place in one container (Mark as Outer), then remove the next array of bolts set about 10mm further in and place in second container (Marked as Inner), next remove the two rubber feet in the centre, the bottom panel should now come off.

Undo the small black 3mm bolts that hold the pcb to the chassis, there are quite a few, some will be hiding under wires, once you have them all look for a earth wire which goes to the front plate from the pcb, unbolt it from the front plate.

Take a few photos before you unplug cables in this next section.
Unplug the input leads from the pot on the pcb, (small white connectors, 3 wires), you will need to remove the volume pot and the centre input board (so called pre amp input) & unsolder wires to phono sockets, remove the input selector board as well. It's not normally necessary to disconnect all the cables, but unplugging them may give a bit more movement.
You may also need to cut some of the cable ties that keep the wires together at the rear of the board. Now the board should lift out, pull it backward a little then up from the front, look out for the front LED it can break, so be careful pulling it out of its hole with small pliers.

The caps you're looking for are the four Blue ones (.47uf) near to the white 5 watt bias resistors, the edge ones nearer the front are the cathode caps. Some people replace the cathode caps as well (same value) opinion is divided as to if this helps the sound, if you have enough caps you may as well do them.

If you're going to use the Russian PIO caps wrap them in shrink wrap or insulation tape, to ensure they don't short out on anything, they have metal bodies and only thin Paint for insulation. You will need to solder on extension wires to one of the caps so they reach, use solid wire, the centre of coaxial aerial cable is ideal, then use shrink wrap over the wires, but for the end 5mm's, once soldered in place tie them down to the legs of other local components with small cable ties (not too tight), as their a bit heavy & you don't want them flapping around.

Once all is done reassemble the amp but before refitting the bottom cover, test it out to ensure all is well. Once done, be careful when refitting the bottom cover not to touch anything inside after testing as the power caps can still hold a charge.

Up grading the coupling caps is the best improvement you can make to a Yaqin amp!

Good luck.

Bob Drinkall

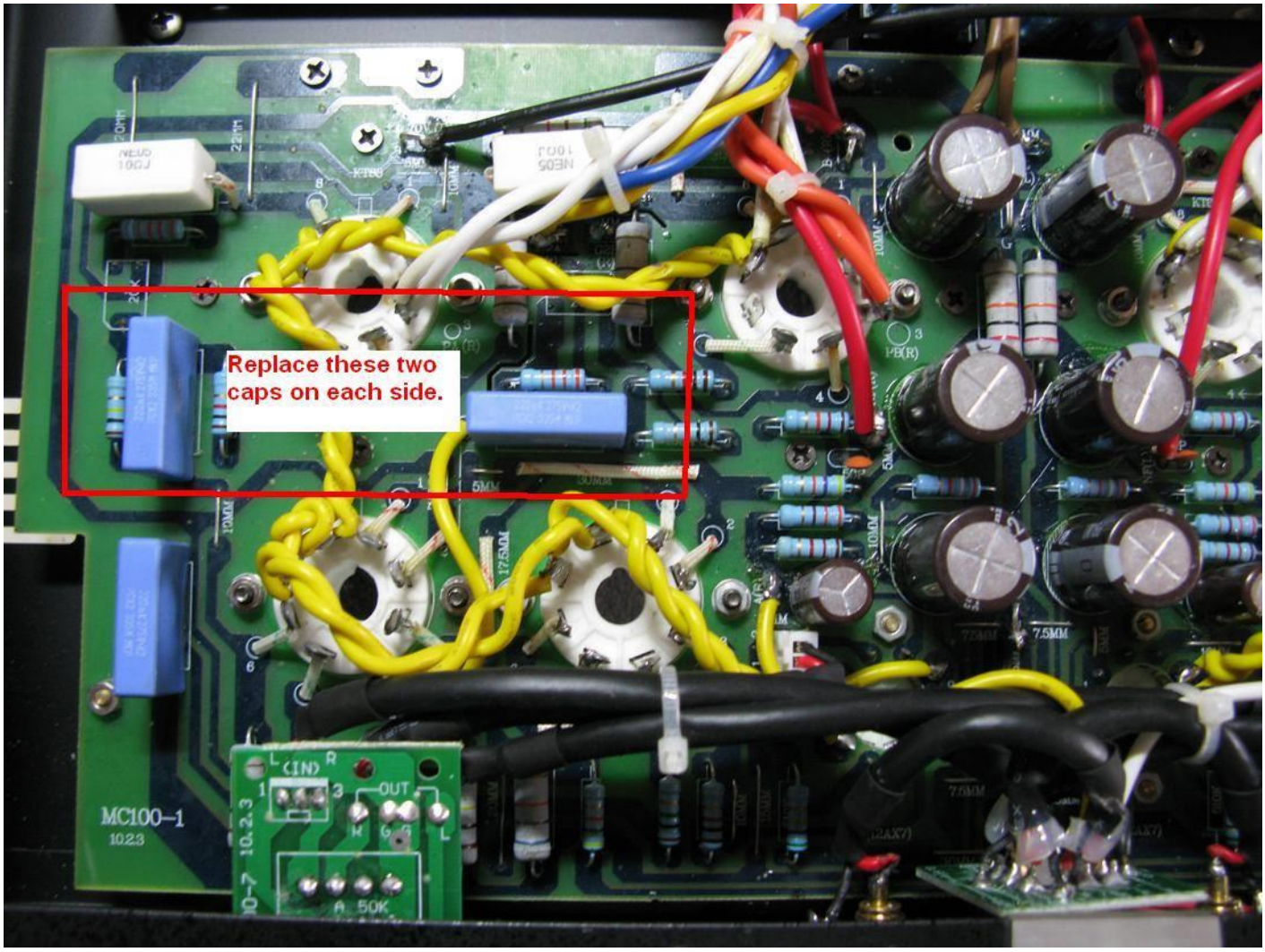

As Bob pointed out, where the Russian paper-in-oil (PIO) capacitors have been fitted (see below), the cases of these are metallic with just Green paint to insulate. An outside covering of heat shrink tubing is not just recommended but should be considered mandatory. Not only the four coupling capacitors have been changed but also the C5/C105 tail capacitors of the phase splitters. Let's hope they don't short anything out on this board, even a simple wind of insulating tape would help here.

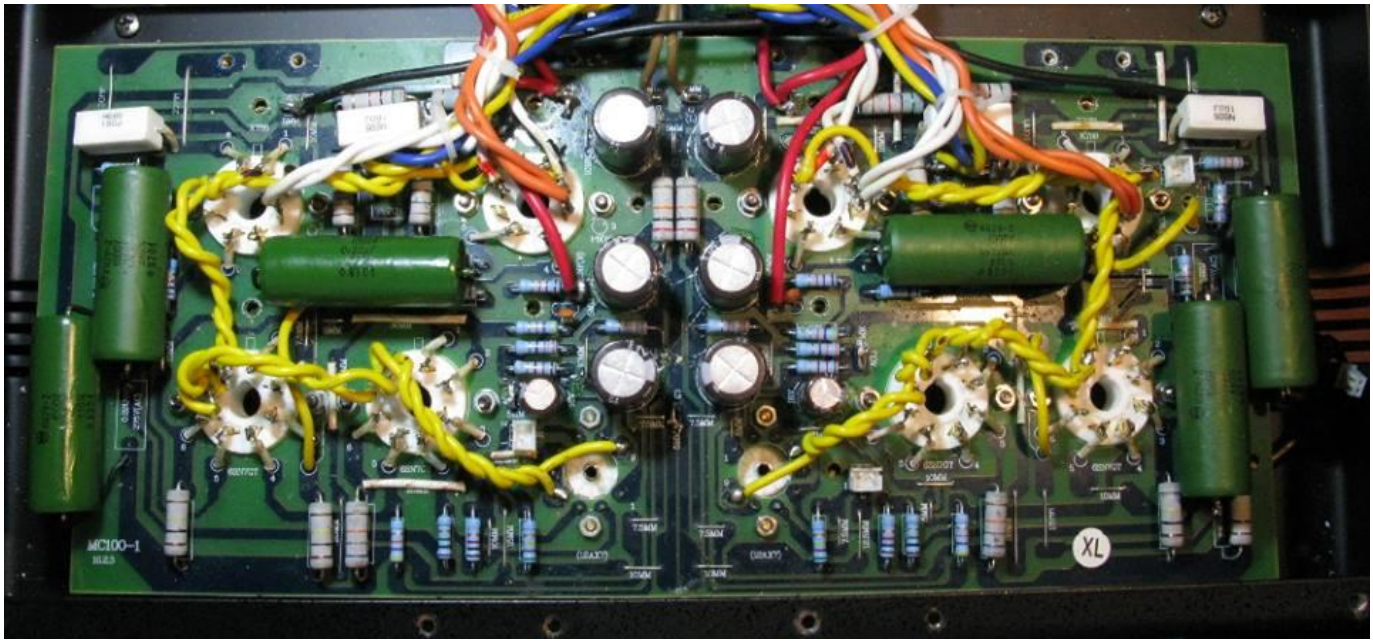

BTW Check that the -70V Black feed wire is clear of the 5k1 resistor in the top left of this photo or this could occur. http://www.g4cnh.com/public/100B_spark_up.mp4

Bob also found another photo that shows the small PCB's which hold the volume, input & front input board removed. Also note there is a Black ground wire which is connected to the front panel, which must be undone, (shown disconnected on right in photo, by case edge).

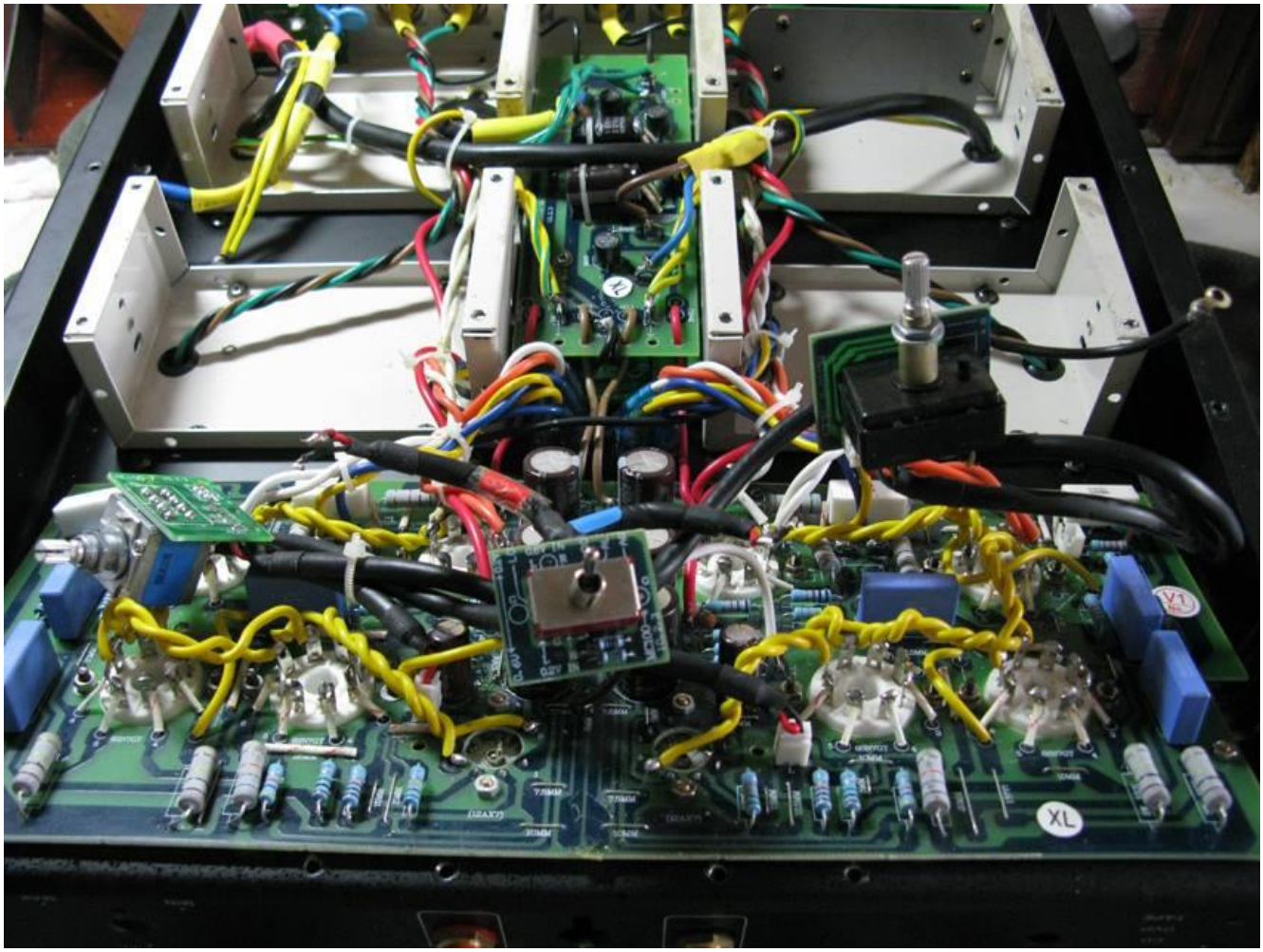

Some real high quality Capacitors fitted here, so large they had to be stood away on long leads.

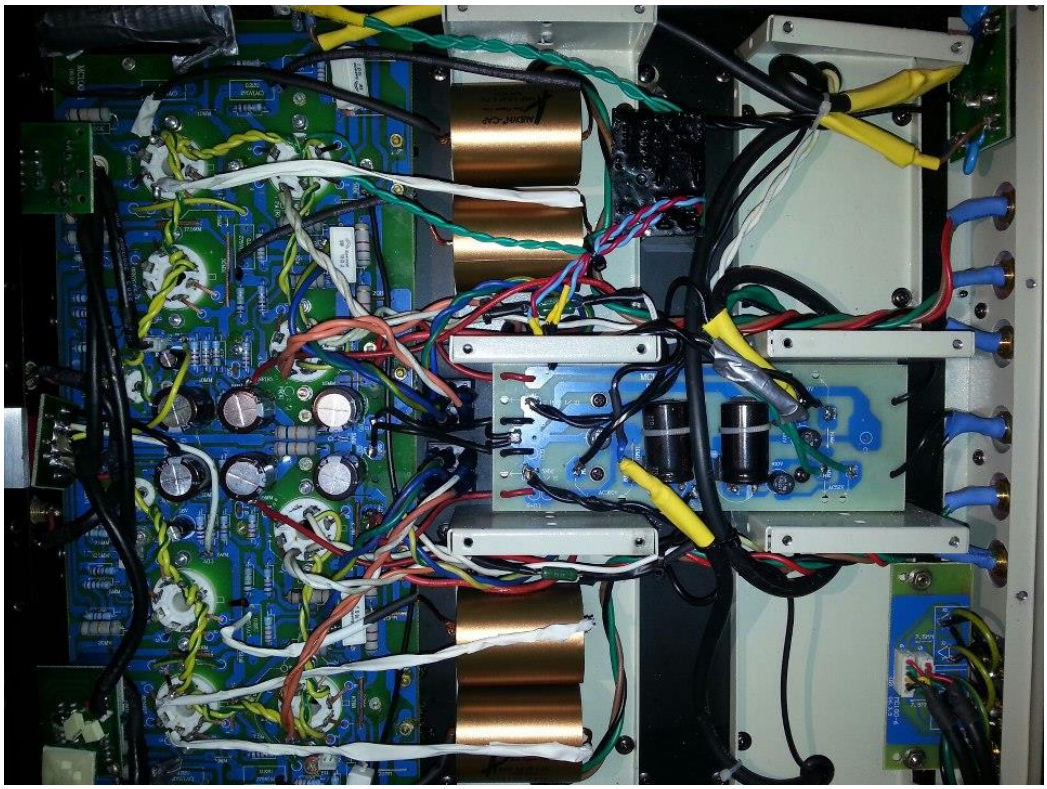

Latest Boards

These newer boards look a lot cleaner with the heater wiring out of the way.
It also looks like the -70V wiring arcing to the 500V HT has been addressed.

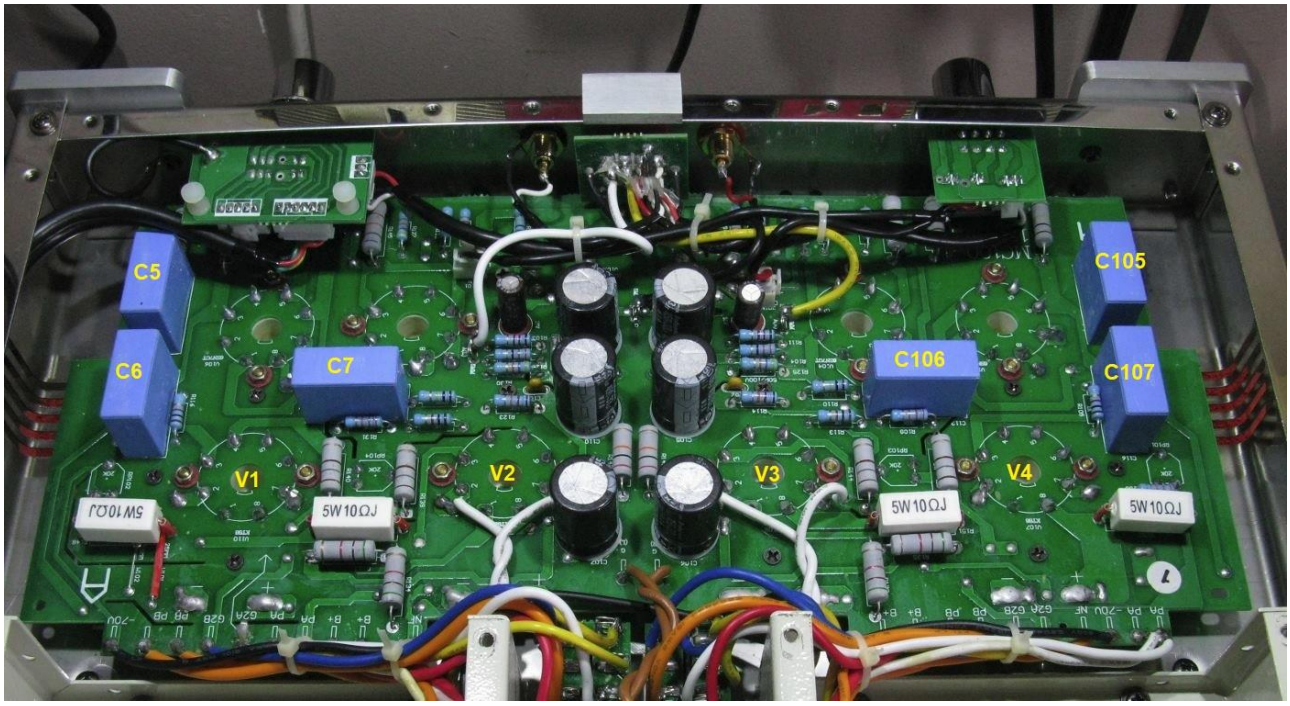

Yaqin MC100B Power supply smoothing capacitors.

The front one can dry out as it has to put up with a lot of heat from the KT88's either direct or re-radiated from the transformer covers. The values seem to change but the most common appears to be the Hitachi HU3 560uF 400V which I think is a fake device as it comes with an unusual jacket and poor logo.

There are 3 other sources, all meeting the required 35mm diameter, some offer as little as 2000 hours life, others go for 17000 or more, all at 105 degrees centigrade.

Best but a bit lower in value is EPCOS 843547 (RS838-5028), 470uF/450V at £14 each.
175000 hours at 105deg/c.

Going the other way (up) we have EPCOS B43544 (RS838-4993), 680uF/400V at £11 each.
175000 hours at 105deg/c.

Cheaper options:-
Nichicon LGX2W561MELC50, 560uF at 450V, (RS 270-880) £8.78 each, 5000 hours at 105 deg/c.
Nippon EKMQ451VSN561MA50S, 560uF at 450V, (RS 841-4794) £5.93 each, 2000 hours at 105deg/c.

When things go POP!

It can be frightening when it happens; speakers go barmy with loud crackles then nothing!
Sometimes you just get a plop, then nothing.
Chances are only one channel went down and a pretty good 99.9% chance it was one of the large output valves. This will be V1 or V2 if Left channel or V3 or V4 if it was the Right channel.

Was it both channels? Where is the supply fuse?

If both channels have gone then possibly one of the output valves has blown the supply fuse, this will be most evident by the loss of the Blue front panel light and none of the valves warming up.

Many newcomers have difficulty finding it; it is hidden in a small drawer which is part of the power input connection. To open the drawer you must first remove the cord from the connector, then with a small screwdriver, pull on the tab located on upper side of the drawer.

The inner compartment is the working fuse and if blown replace with same type. Take care not be fooled by the spare fuse as it may be of wrong amperage and meant for use with 120V supplies.
Fitting this higher amperage fuse in place of the lower rated 220V fuse could place the power transformer in jeopardy, if for example it is a 2Amp fuse, then fit another 2 Amp fuse and not the spare which may be rated at 4 Amps.

So only one channel gone?

Ok – is there still sound albeit lower in volume on this channel?
If Yes, then the HT fuse for this channel (mounted on the rear panel, below the Speaker Terminals), is still intact.
(NOTE: early 100b's did not have this extra level of protection; it is recommend to be fitted as page 13)

OK **Switch Off** and pull both output valves from this **faulty channel**, **making a note from where they came from,** i.e. V1 or V2 (if Left Channel) and V3 or V4 (if Right Channel) as this may be useful.
Treat both of the output valves as suspect, guilty until proven innocent!

1st Check) bias monitor resistor. NO POWER ON!

It is quite possible that a flash over in one of the output valves has blown its cathode resistor, these are easy to check without dismantling by using the bias monitor points.
Using a Multimeter, check for a resistance of approximately 10 Ohms between the bias monitor points for each of the output valves on the faulty channel.

As you can see, the resistors are both intact although the monitor resistor for V1 shows a little high in value. This would result in a bias measurement error of 8%. One of the reasons why the Author advocates the use of an external bias monitor box.
By fitting 1% resistors instead of the fitted 5% ones, you will get a more accurate measurement on your multi-meter. That's if you are really fussy.
Setting up say 500mV could be plus or minus 5mV in error instead of plus or minus 25mV with the stock 5% ones.

OK, so far you have proven that an errant valve has not blown its bias resistor.
If for example the resistor is blown on V2, then we know that V2 is the culprit and V1 probably innocent or vice versa, hence one of the reasons for marking the valves for identification.
In order to give the amplifier a clean bill of health on the faulty output stage, we need to do just three more checks on each valve position, starting with V1 then V2 (Left Channel) or V3 then V4 (Right Channel).

These will be:-
2nd Check) Bias voltage,
3rd Check) Anode or Plate supply and
4th Check) Screen Grid supply.

2nd Check) Bias Voltage - Apply Multimeter –ve probe to the Chassis or any bias monitor point marked – which is normally the left hand one. Apply the Multimeter +ve probe to pin 5 of V1 (see below), switch on amplifier, note the reading and switch back off immediately. Repeat for V2 but for the Right Channel this will be V3 and V4. To be around the value shown, its value will depend on the last setting of that valves bias control. The main purpose is to check it is actually there and should be a **Negative voltage** greater than -35V. If it is a large **Positive** voltage then this is serious and could be due to a faulty coupling capacitor.

Bias problems

It would be most unlikely to find loss of the negative bias voltage on more than one of the vacant valve holders unless serious damage had been done to the bias supply components. You should be able to see this voltage vary with adjustment of the bias control for the valve holder you are measuring. Check that the voltage change is smooth and there are no control settings that give intermittent readings as for example the control had a damaged internal track. You will have to re-bias each stage if you alter the control settings.

If you set the control for maximum negative voltage than you will be preparing the circuit to give minimum current through the valve when it is replaced and its final setting point can be set later.

3rd Check) Anode or Plate supply - Keeping the Multimeter –ve probe as before, apply the Multimeter +ve probe to pin 3 of V1 (see below), switch on amplifier, note the reading and switch back off immediately. To be around the value shown unless perhaps the rear mounted fuse has blown.

The main purpose is to check HT fuse is intact and transformer winding is not open circuit.
Allow voltage to drain away before placing +ve probe onto pin 3 of the next output valve socket.

4th Check) Screen Grid supply –

Allow voltage to drain away before placing +ve probe onto pin 4 as shown below.

Keeping the Multimeter –ve probe as before, apply the Multimeter +ve probe to pin 4 of V1 (see below), switch on amplifier, note the reading and switch back off immediately.
To be around the value shown, having already ascertained that the rear mounted fuse is in order, loss of any voltage here can only be due to either an open circuit 180 Ohm screen resistor or an open circuit output transformer ultra-linear tapping (Heaven forbid). This can be verified by switching to Triode mode as this should bring back the voltage if the transformer tapping is open circuit.
However, before condemning the transformer, check that the Triode/Ultra-Linear switch is not faulty in the U/L position.

Allow voltage to drain away before placing +ve probe onto pin 4 of the next output valve sockets.

So let's assume all voltages are correct and you have, or have not, needed to replace the cathode resistor. It all points now to a defective valve that has caused the problem and these are best checked on a valve tester designed for the job. You could of course check for shorts inside the valve using a Multimeter but it is quite likely that the short circuit is intermittent and it is not really a good test. For peace of mind, I would definitely recommend the replacing of both valves which hopefully will restore proper operation. But remember of course that for testing purposes you still have a good known pair in the working channel!

Slight changes in measured voltages on the bias points is quite normal as the valve ages, some makes of valves are more steady than others, the Author found KT90EH to be very steady but they seem to fail due to suspected shorting of Cathode to Heater, you cannot win sometimes.

Fitting HT (B+) fuses to the MC100B.

Early 100b's were not fitted with HT fuses on the rear panel, there was no protection at all apart from the power input fuse. It was hoped to be able to mount these extra fuses on the rear panel but the metalwork here is very thick and makes mounting of a standard 20mm fuse holder impossible.

An alternative location is on the much thinner side rails where the power switch is located. It is hard to believe but Yaqin have used more than one place to mount the power switch, either towards the rear as shown in the photo below or further forwards in the next avaliable space between the support bracket and the printed circuit board. So the actual position of the two extra fuse holders will no doubt depend on where Yaqin have mounted the power switch in your particular MC100b.

Unlike the MC10 series, the top cover is not easy to remove and therefor doing this modification in no way limits access to other parts of the amplifier. The 100b seems to have been built from upper to lower levels, finishing with the bolting down of the base plate so it is assumed that any work on the printed circuit board will require its complete removal from the underside. A rather daunting prospect to the Author but if the Chinese wiring operative has done the work correctly, the circuit board should hopefully fold back on its wiring loom for access.

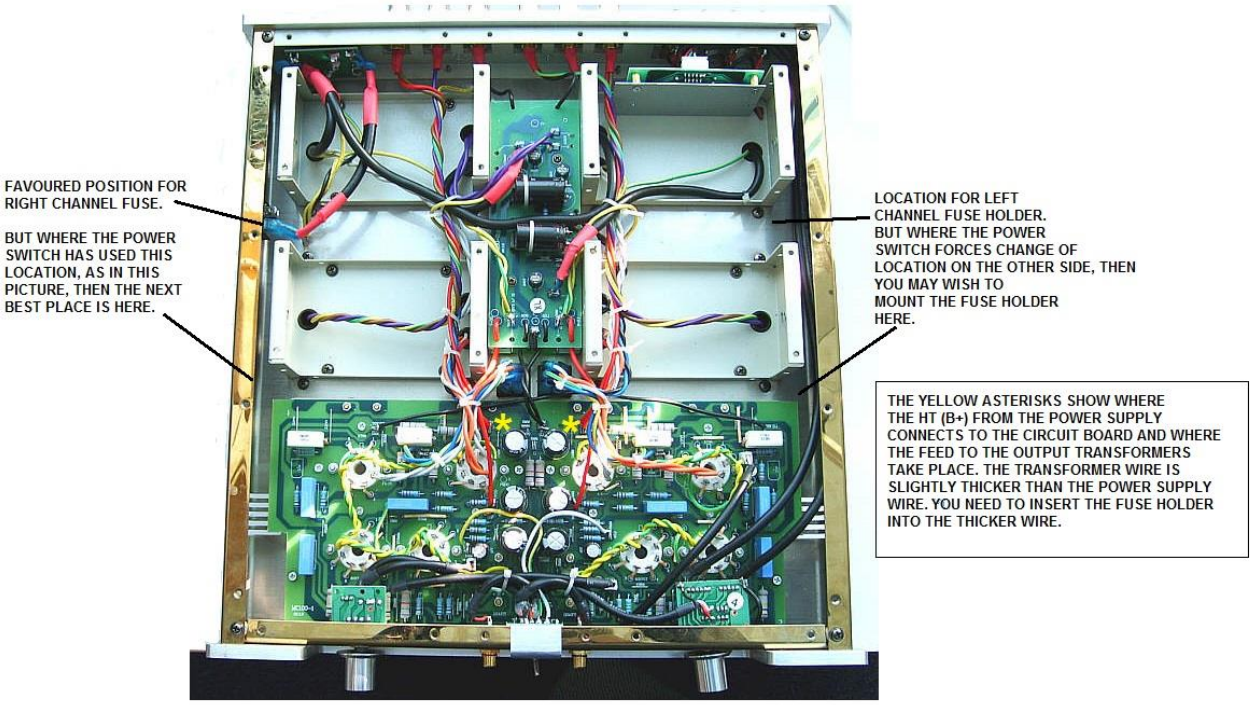

In removing the Base Plate, the Author encountered many difficult screws due to thread locking compound and damage to threads due to poor alignment of fixing holes. Some screws came out with virtually no thread on them and one even lost its head as soon as an attempt was made to remove it. It gave the impression that some screws had been forced home regadless of torque limits. Drilling the sides was at first quite difficult and the Author wondered if the top was a sheet of pure Titanium, obviously Stainless Steel and the holes were started with a 1.5mm drill and slowly worked up in size. The key here is speed, the faster the drill bit was worked then the easier it seemed to be. After 6mm a stepped conical hole cutter was used which worked surprisingly well to take the hole to the size required for the fuse holder.

The Author tried to use 200mA Ultra Rapid Blow fuses to provide maximum protection for the output transformers but these ocassionally gave nuisance blowing. The difference between these fuses and the Yaqin quick blow ones, in the time they take to actually operate, is shown below.

CURRENT	TIME FOR YAQIN 500mA FUSE	TIME FOR RS 188-6524 200mA FAST BLOW
300mA	NEVER BLOW	NEVER BLOW
400mA	NEVER BLOW	4 SECONDS
500mA	NEVER BLOW	100 MILLISECONDS
600mA	GREATER THAN 1000 SECONDS	25 MILLISECONDS
700mA	GREATER THAN 100 SECONDS	15 MILLISECONDS
800mA	5 SECONDS	10 MILLISECONDS
900mA	800 MILLISECONDS	7 MILLISECONDS
1A	100 MILLISECONDS	6 MILLISECONDS

The fuse found to be the best, though quite expensive, is the Ultra Rapid Blow fuse rated at 315mA. These are RS 188-6546, Mersen Z084018P, £2.20 each (in 2020) and come in a pack of 10 (Gulp!) Still cheaper than a replacement output transformer.

Surge limiter and delay circuit

This is how somebody else incorporated one of these circuits; the Author wishes he had the owners name for acknowledgement.

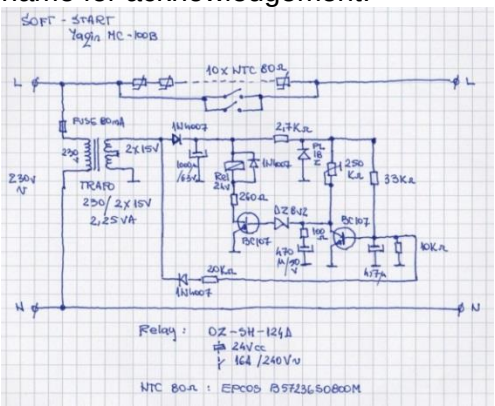

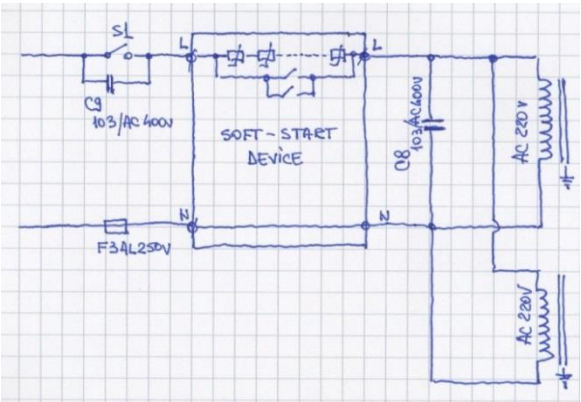

Here are the photographs associated with the above circuitry.

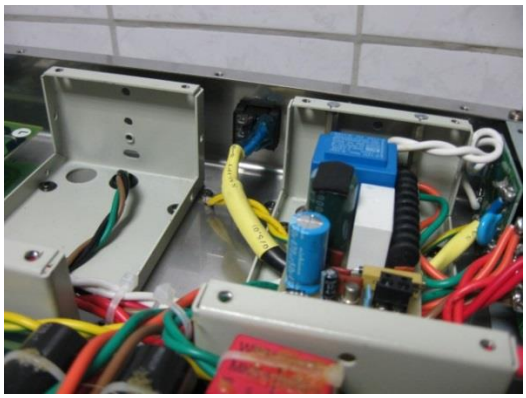

As one can see, a lot of effort is required including the manufacture of a custom circuit board.

Further thoughts of the Author

The Authors idea was to use a mains operated Timer Relay (Omron H3YN-4) to do the one minute delay and being a four pole device, three poles can be used for switching with the fourth used to change the Red/Green indicator on the front panel. The price of the 80 Ohm NTC resistors used in the above design is double that of the 120 Ohm version (EPCOS B57236S0121M000, RS185-7771) so these were used instead. The above circuit also gave a starting resistance of 10 x 80 Ohm = 800 Ohms dropping to 8.61 Ohms when the NTC's reach full operational temperature.

The new circuit uses 7 x 120 Ohm = 840 Ohms and dropping to 6.93 Ohms at full operational temperature. It pays to watch auction sites such as eBay, the Author obtained two 1-10 minute timers, with bases, for just £6 each and these would normally cost nearly £60 each! As the relay is switching an inductive circuit, particularly after a period of operation when the NTC's will be cold, it makes sense to add a snubber network across its contacts such as the Kemet PMR209MC6100M100R30, RS 206-7881. The only drawback is that for 115V working a new Timer relay will have to be purchased, but this was not expected to be a problem for the Author and besides, having the relay plugged into its own base certainly helps in changing the relay for a 115V version.

The Author recommends you purchase the later relays that can be selected to give a 0-1 minute timing as the early ones with a 0-30 minute timing are a bit course for setting 1 minute. Also double check the relay voltage before ordering as they are made for other voltages even 24V dc.

Although the circuit so far reduces the switch-on surge, we still have to provide the protection of the KT88 cathodes as these will have to warm up with a high voltage on their anodes. Over time this can result in what is known as cathode stripping and was usually prevented by switching on HT (B+) after the valves had fully warmed, usually after 1 minute. Special thermal switching valves were developed for this operation in conjunction with a relay that not only applied HT but also, thanks to thermal lag, turned off the heater inside the thermal delay valve. Another contact (RL1b) took over the task of maintaining the relay supply, normally through a power saving resistor as the current required for an energised relay is less than that required to energise it.

How they used to do it - Thermal Delay Switch

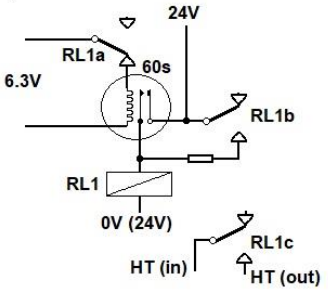

The best place to switch the HT will be after the smoothers such that high in-rush currents will be avoided. Placing it before the smoothers would not only circumnavigate our surge limiting circuit but also might otherwise damage the 3A contact rating of the Timer relay we are using.
The following shows the new circuit which, thanks to the relay being a 4 pole, can do all that is required including indication. The Author deleted C8 on his 100B because he decided to fit a filtered mains input plug to do the same task, a decision not to be taken lightly as will be revealed later. Also shown is the position of the two 4mm clearance holes required to mount the Omron relay base PYF14A.

This is how the Author implemented the circuit. Details on fitting the circuit are given on Page 17.

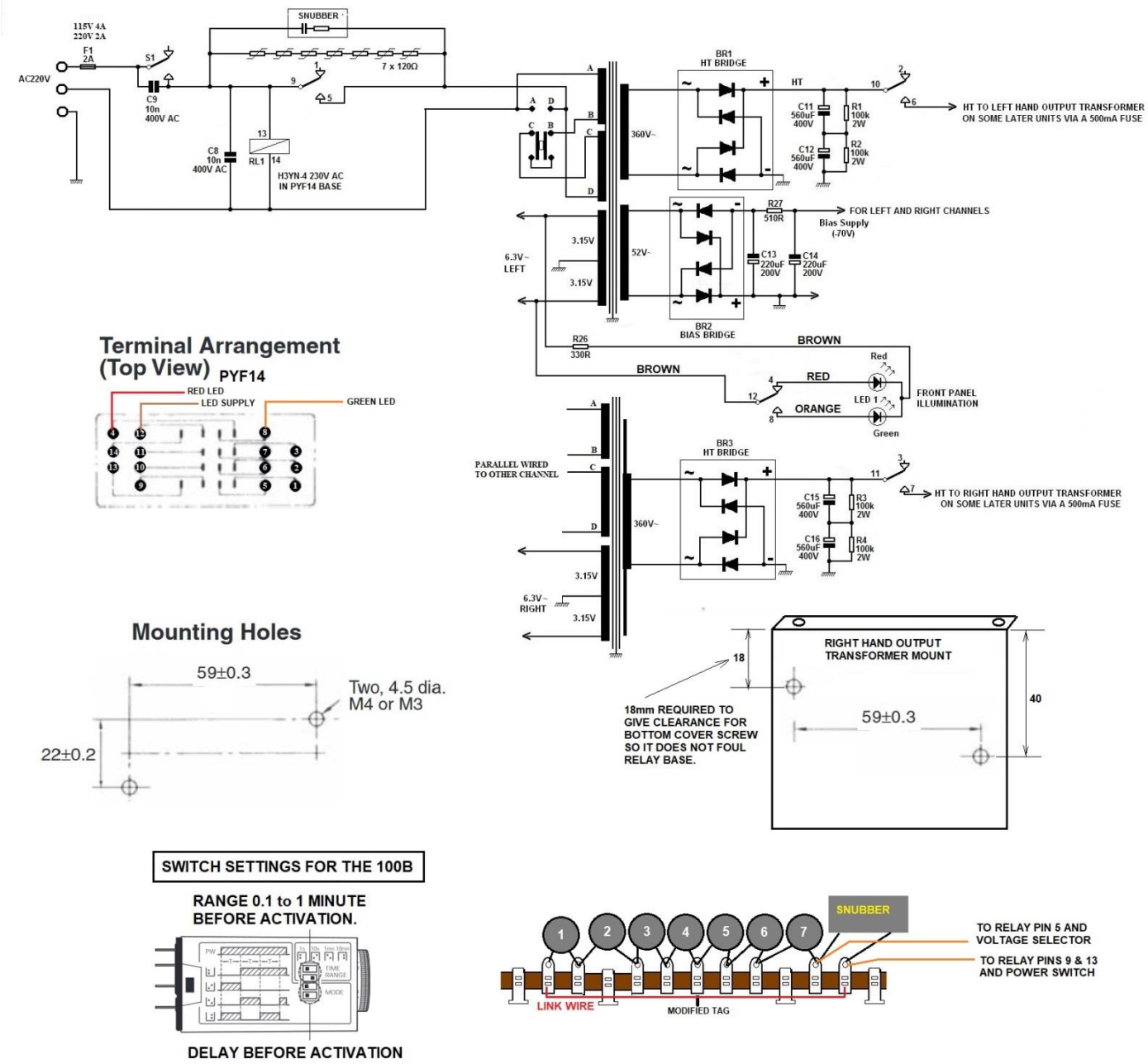

Fitting a filtered power input plug.

This is definitely **not recommended** for anyone without experience to be able to fit this.
The Author selected a EPCOS B84773A (RS 780-5026) as this was sitting in the spares box. In order to be able to remove the stock power input connector, you have to unsolder the tags that connect it to the small circuit board. The stock power input plug can now be extracted by removing the two fixing screws.
You will then find that the filter plug will not fit into the hole vacated by the previous input plug, so a lot of filing will have to be done to achieve this. Not to be taken lightly as the rear panel is very thick alluminium and the fit has to be kept central, height wise, for the fixing screws to use the same positions.

Even having achieved this, you will find it impossible to fit the new filter plug as one of its terminals will now foul the flange of the right hand output transformer. This is not load supporting so can be eased back with some heavy duty pliars to give adequate clearance as shown.

Flange to be bent back

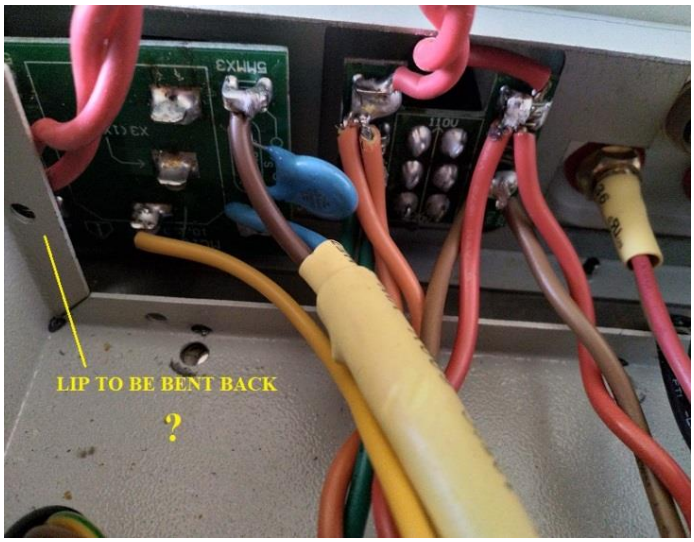

The Problem

Flange bent back to clear

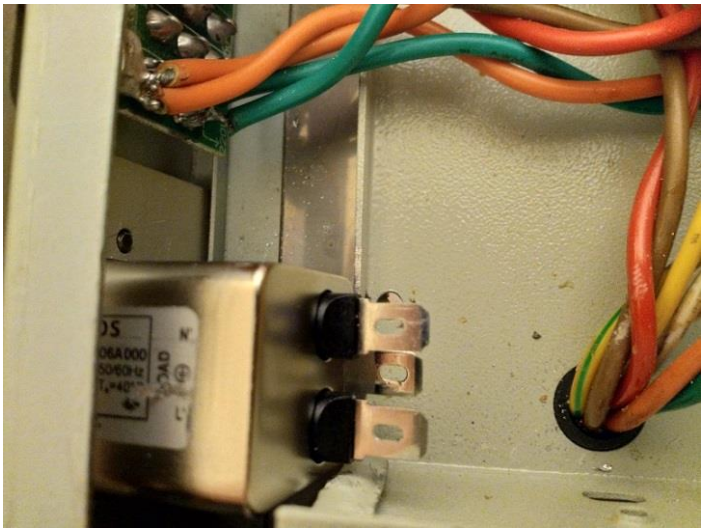

The thick cable with Yellow outer sleeving is the cable supplying power Live (Brown) to the side mounted switch which returns on the Blue. This is routed to one of the Red twisted wires on the original input plug board. The other Red twisted wire carries supply Neutral; they both go to the voltage selector switch.

All you need to do is –
Connect the Chassis wire (Yellow/Green) to the Earth Tab **(MOST IMPORTANT)** on the filtered input Plug. The Red wire that went to Neutral on the original board goes to Neutral (N) on the filtered input Plug.
The other Red wire has to be connected to the Blue wire coming back from the switch and will need to be insulated with either heat shrink sleeving or large solder sleeve.

The Authors Surge limiter and delay circuit

Wiring is a different story if you decide to fit the Authors surge limiter and delay relay.
At least the tag strip (RS 433-775) has the right spacing to enable it to be secured by the transformer cover mounting screws.
Surge limiter fitted. Note that the tag strip carries mains power supply even after the time delay relay has activated as it will be applying mains to both ends by its shorting contacts. The Author considered fitting some kind of insulating cover over the tag strip but as access required a lot of work with a screwdriver, this was considered unnecessary especially when one accepts the fact that the mains inlet is also un-shrouded.

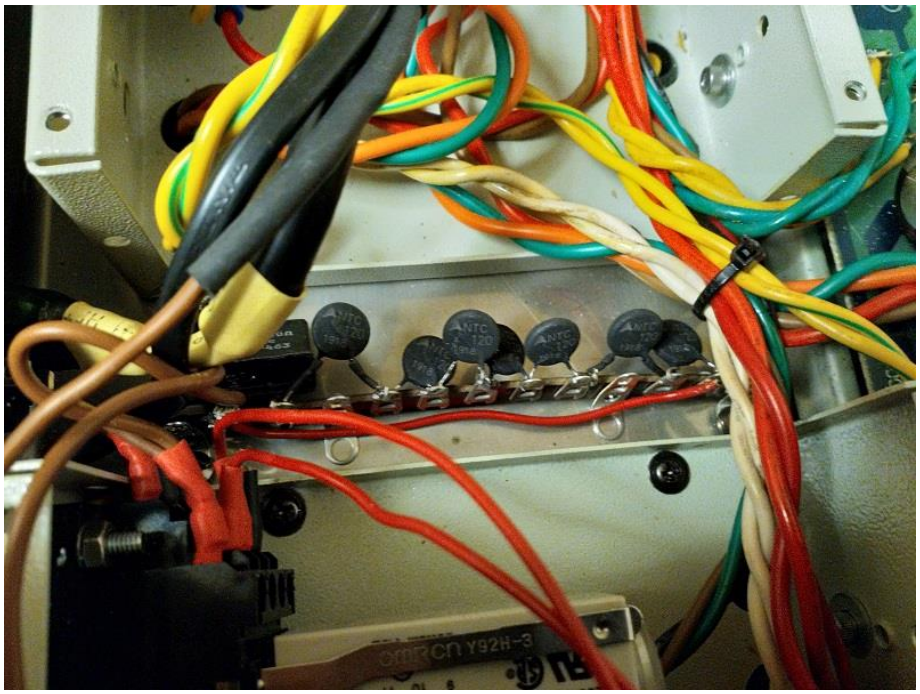

A view showing the wiring dressed away from the surge suppressors which run hot during the 1 minute warm up sequence. The HY3-4 relay is installed and held in by two Y92H-3 special clips which strangely enough were difficult to source from the major distributors and the Author had to find them on eBay.

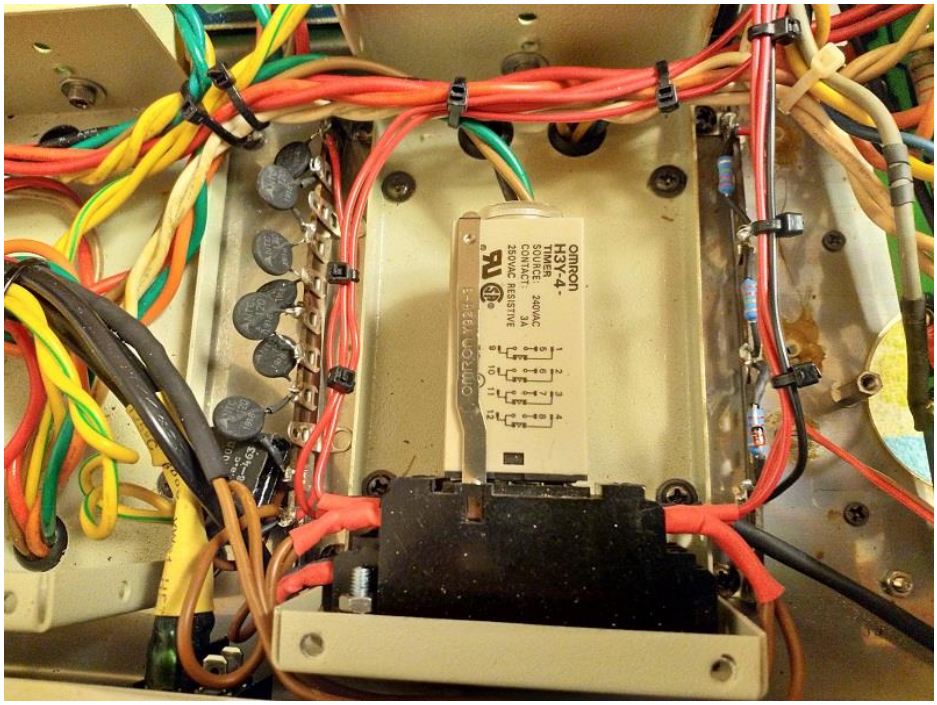

The front panel LED chosen by the Author was a 3mm dual colour (Red/Green) common cathode LED which he obtained from RS components (228-5685) but of course any equivalent will do.
A small dab of super glue is sufficient to hold it in place on the front panel.

External bias monitor

(See also Page 20)

It had been intended to fit an LCD panel meter but problems arose due to the supply ground being the same as the input LO terminal of the panel meter. Normally a floating power supply is required for the meter, it would not work with an internally generated +9V. So the Author decided to dispense with the panel meter. In its place went a single RCA jack onto the front panel, allowing an external Multimeter to be connected for monitoring purposes and a selector switch making short work of connecting to each monitor resistor. To improve accuracy even more, the original four 10 Ohm 3W 5% tolerance resistors were replaced with 10 Ohm 3W 1% tolerance types, e.g. RS Stock No. 124-9327

Also used was a 2 pole 6 way sub-minature rotary switch such as the RS 161-5114 with a 3mm shaft, fitted with a suitable control knob such as the RS 137-5478.

A large label had to be made to cover the holes that the previous front panel parts left behind, the easy monitoring of the output valves was considered far more useful than the previous switch and RCA sockets.

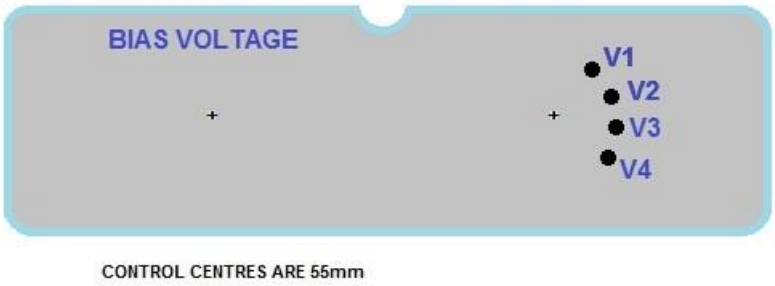

http://www.g4cnh.com/public/1.mp4 to see the monitor switch and delay in action.

Replacing the volume control

Many advocate doing this as the stock control is seen as being inferior to something like an ALPS Blue potentiometer. The Author has no problems with the stock control on his 100B as it is set permanently to its maximum position and control is undertaken by a remote motor driven ALPS control. However he was called upon to replace the control in a 100B and as he does not like soldering directly onto the potentiometer tags, he made a small strip-board to interface between the control and the amplifier wiring. Of course you do not have to adopt this method but the pictures show how the potentiometer is wired. Note that this particular control had four tags per channel, this was intended for use with a loudness circuit and is not used on the 100B and the board should be able to cater for either the 3 tag or 4 tag controls.

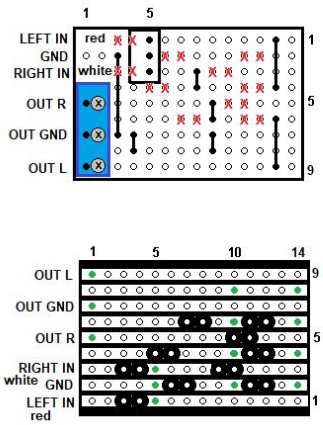

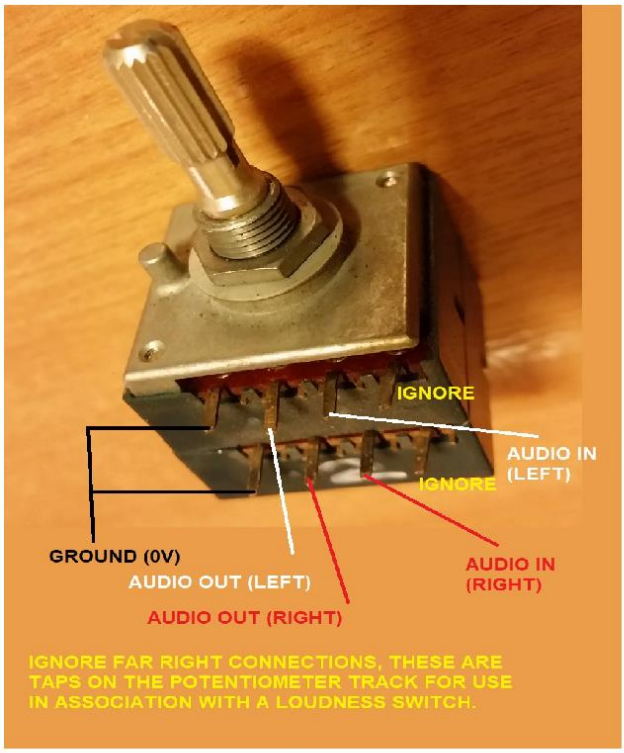

Board showing link locations and the input plug position.
The plug was obtained from the old circuit board.

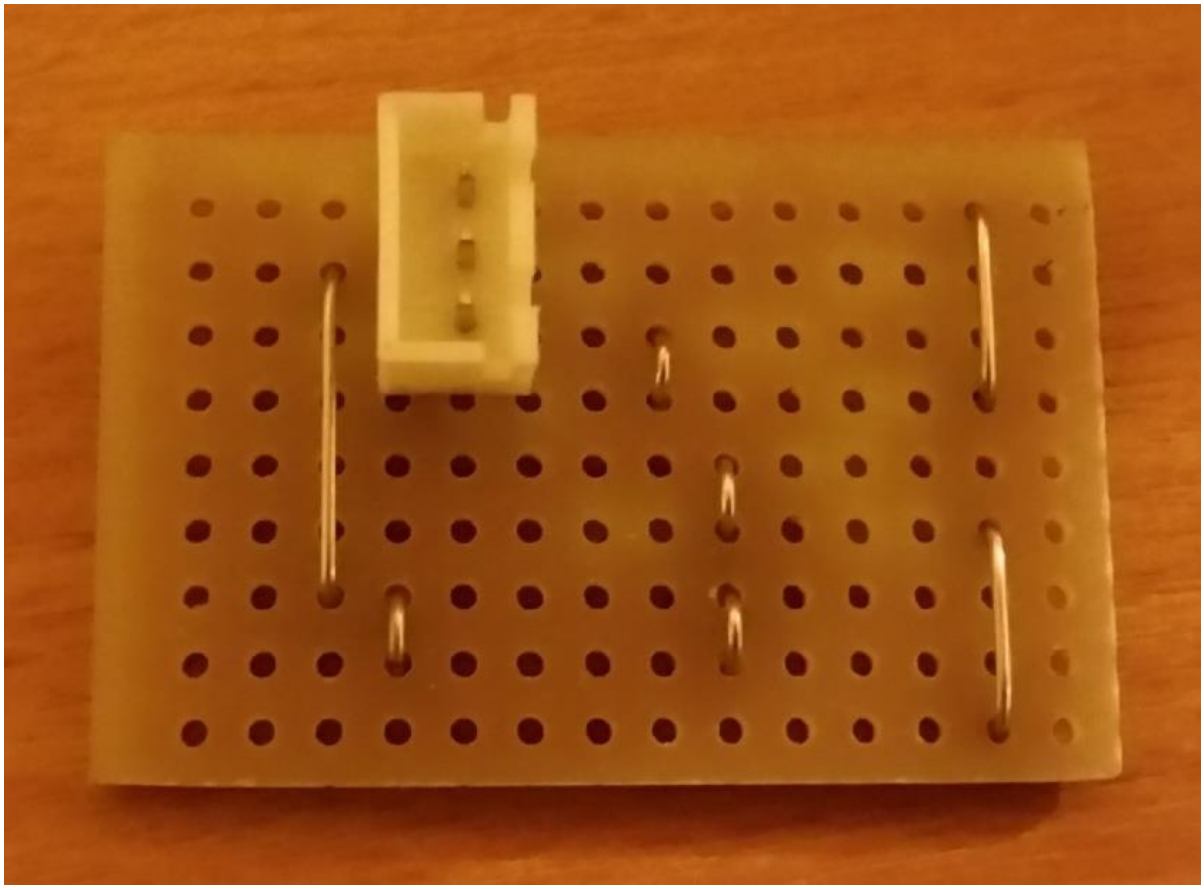

View of complete assembly.

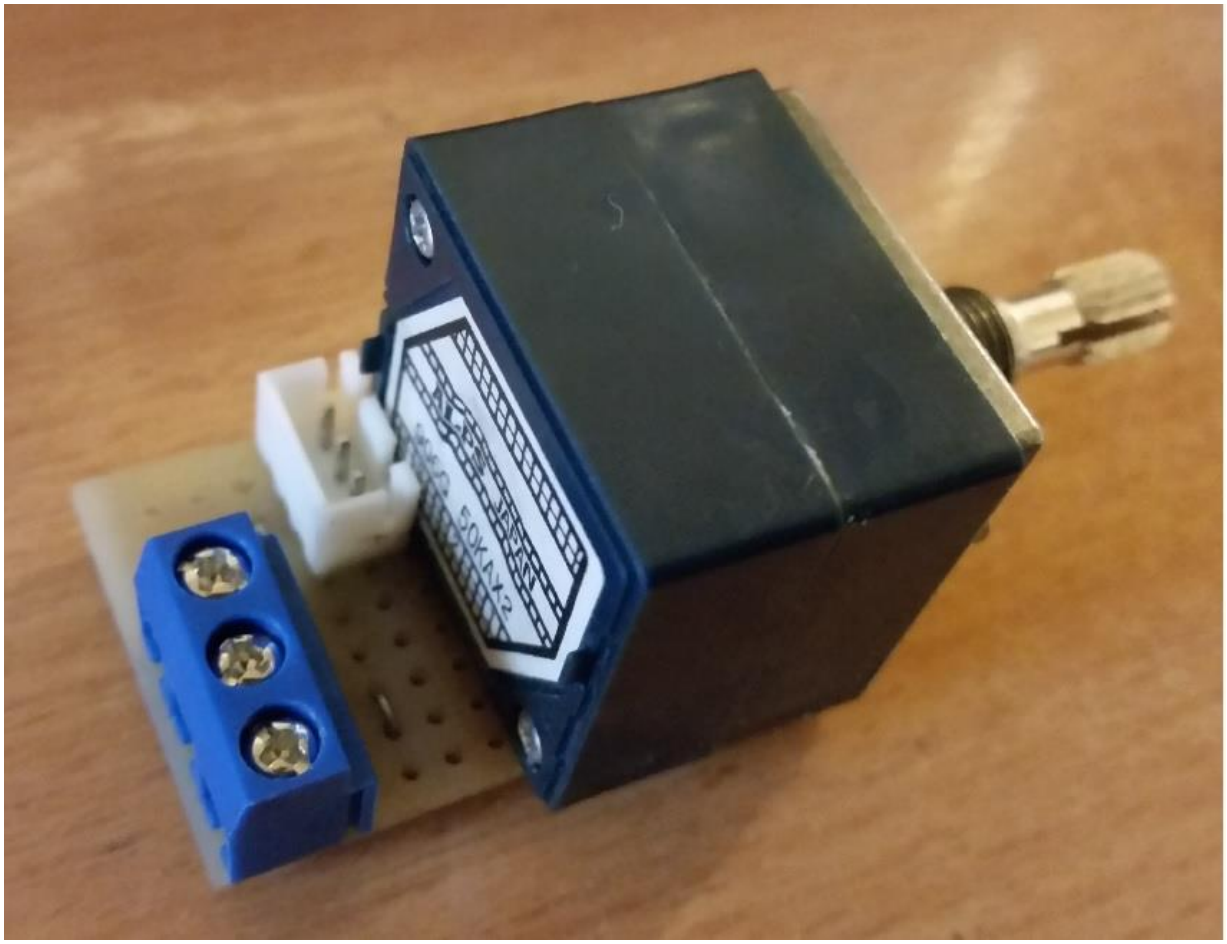

Future ideas on the bias monitor – Rudolf Szalo

Rudolf Szalo hails from Melbourne, Victoria, Australia and has replaced his front panel sockets with meters to show outputs on both channels.

This has made me think about using these meters to not only do this function but also to show the valve bias voltages. It will depend on what sensitivities these meters are geared for and any circuit design will depend on finding the meters internal resistance and full scale voltage.

Perhaps it may be possible to replace the front panel switch with a small rotary 2 or 4 pole 3 way switch.
Position 1 – Audio outputs
Position 2 – V1 and V2 bias voltage (V1 on Left Meter and V2 on Right Meter)
Position 3 – V3 and V4 bias voltage (V3 on Left Meter and V4 on Right Meter)

Possible circuit starting point, all components may need changing dependent on Meter and also the inputs from the valve cathodes will probably need series elements added. (See also Page 24)

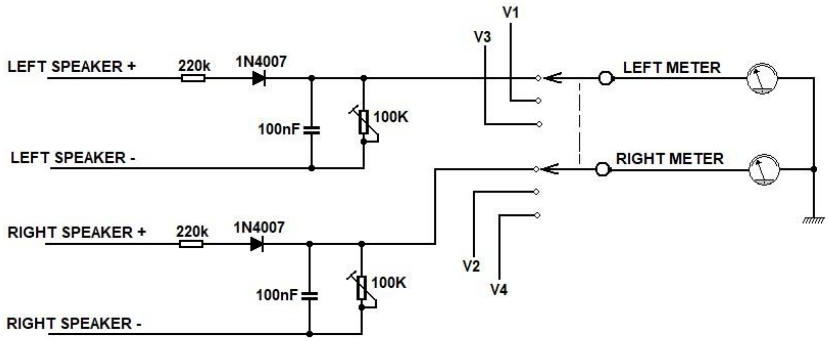

Rudolf commented:-
"The VU meter used in the MC-100B can be purchased on eBay, search for 2x Panel VU Meter, Warm Back Light, Recording & Audio Level Amp with Driver Board.
The kit has 2 pieces of 35 x 35mm meters and a driver board. The driver board requires power, AC/DC 12V-15V and for this I purchased at Jaycar a small transformer providing 12.6V.
https://www.jaycar.com.au/12-6v-ct-150ma-1-9va-centre-tapped-transformer-type-2851/p/MM2006.
I installed the transformer under the right output transformer next to the power switch and I connected to the voltage selector switch.
The transformer is 240V, so the amplifier can't be used anymore with 110 V.
Taking in consideration that the amp was never used with 110V this is not an important factor.

Rudolf took some nice photographs of the work he did and here are more of his notes.

Since the VU meters would not fit, three resistors were moved to the other side of the PCB .

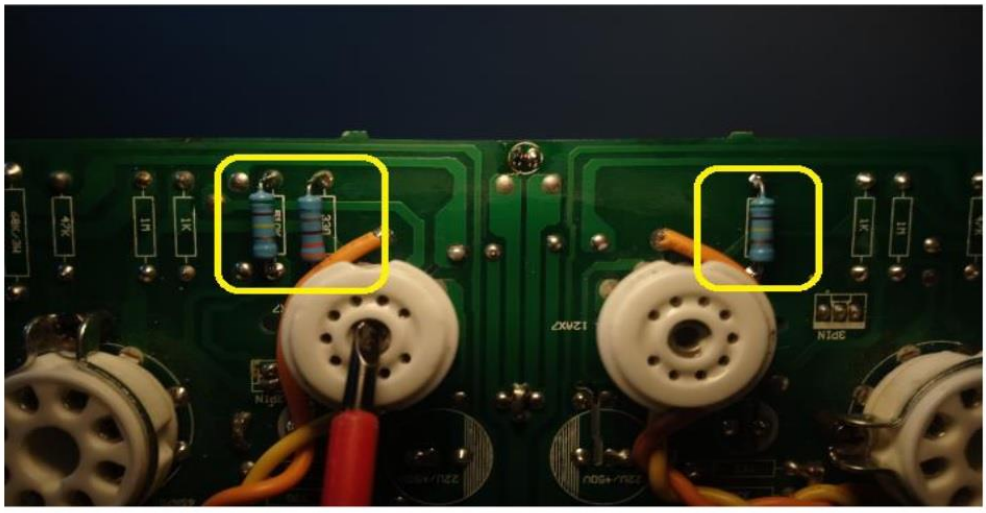

The input selector and the volume potentiometer were removed; a wooden slat was fixed to the back of the front plate to increase the rigidity of the front plate. The wires from the front RCA connectors were removed years ago, the switch was left without function. Two holes were pilot drilled at the centre of the position of the VU meters.

Next step was to drill the 35 mm holes with a cone cutter or hole saw.

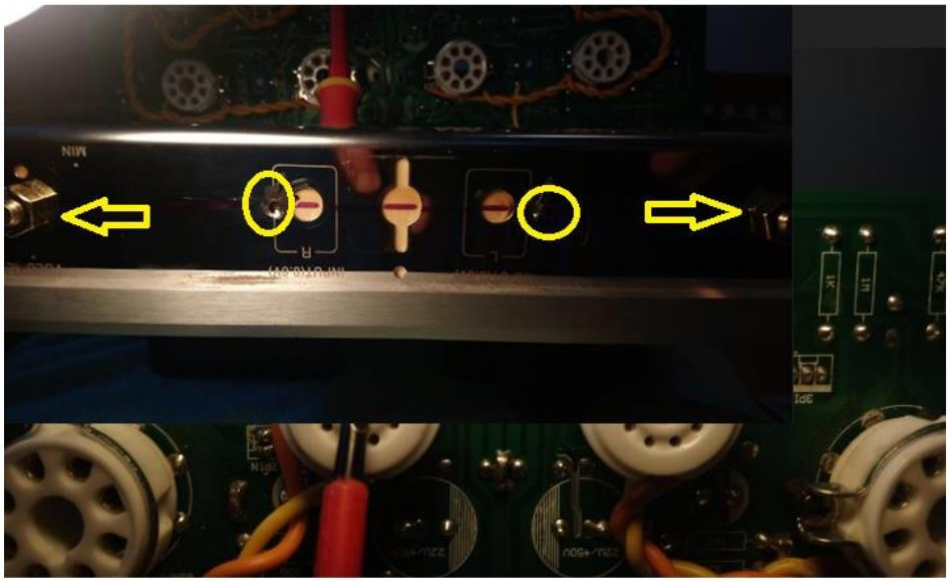

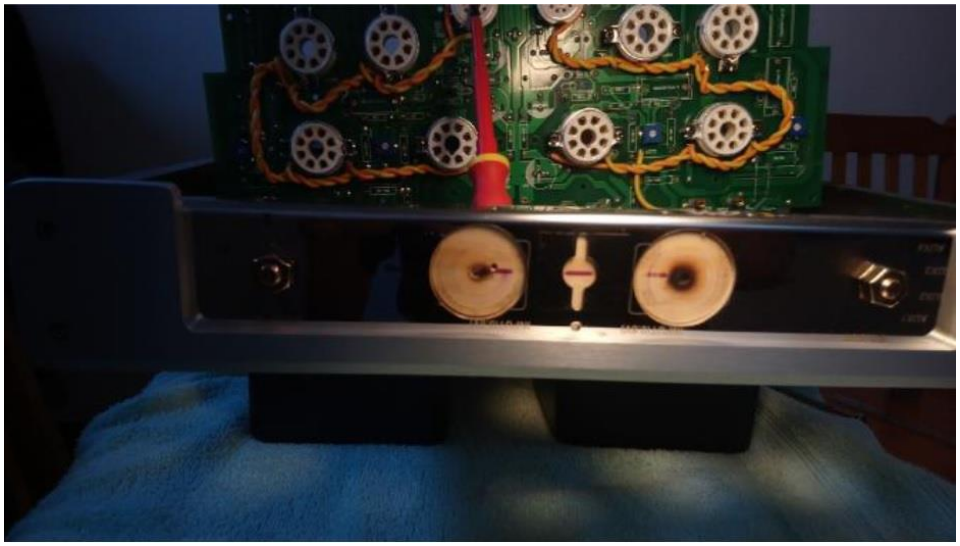

Since the distance between the body of the VU meters and the four holes for fixing the meters was less than 1 mm I used Dremel with abrasive cutting wheels to grind the holes for the nuts.

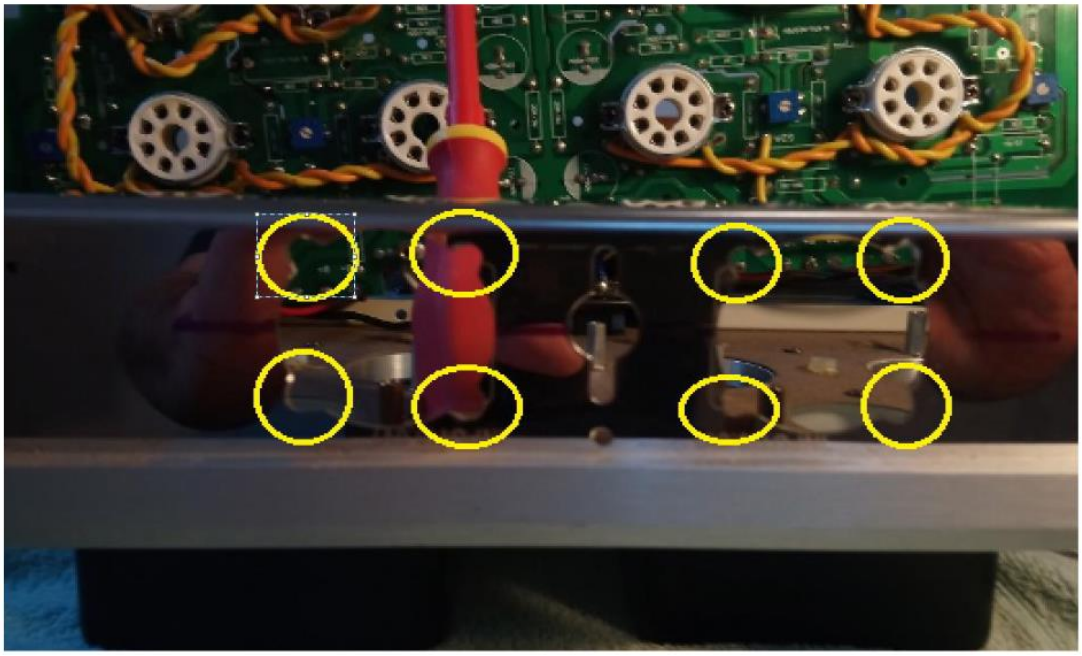

I put back the main PCB. I removed the two bolts from the locations below. A panel was made which was installed with 10 mm spacers where originally the bolts were. The driver panel was installed on the custom-made panel. In order the distance from the volume pot not to be high the whole assembly was installed next to the volume pot. I connected the input of the driver panel to the output of the volume pot.

I drilled 2x8 mm holes on the bottom cover to be able to adjust from outside the trimmer pots on the driver board.

The background lights of the meters can be powered from the 6.3V AC of the heaters or else the driver panel has 2 outputs for this purpose, however I found the light is too strong if using those. Also the life expectancy of the LEDs can be increased by using lower voltage

Currently I am using the panel supplied with the kit, but I am thinking to try this "simple circuit" here: https://www.giangrandi.org/electr.../vu-meter/vu-meter.shtml. (See Page 24)
I considered a digital Multimeter more accurate than a Chinese commercial grade meter, I didn't implement the biasing functionality, but there is a guy who did
https://www.facebook.com/photo.php?fbid=1489073794591645&set=p.1489073794591645&type=3

Well that's it, too much metal working for the Author to try this out and surprised the front panel needed to be lined with wood to strengthen it. He would preferably like to fit smaller meters if they can be found and make it all work in a passive manner, i.e. no powered driver board needed. Maybe some kind of distance piece, either metal or plastic, could be fitted between the meter and front panel. This would reduce depth required behind the front panel and hopefully make the 35mm holes easier to cut, especially with a plastic box. ☺
So this section will be kept open and added to as more info and results are available.

Meter circuit suggested by Giangrandi

This is the circuit suggested by Giangrandi with some of the Authors additions.

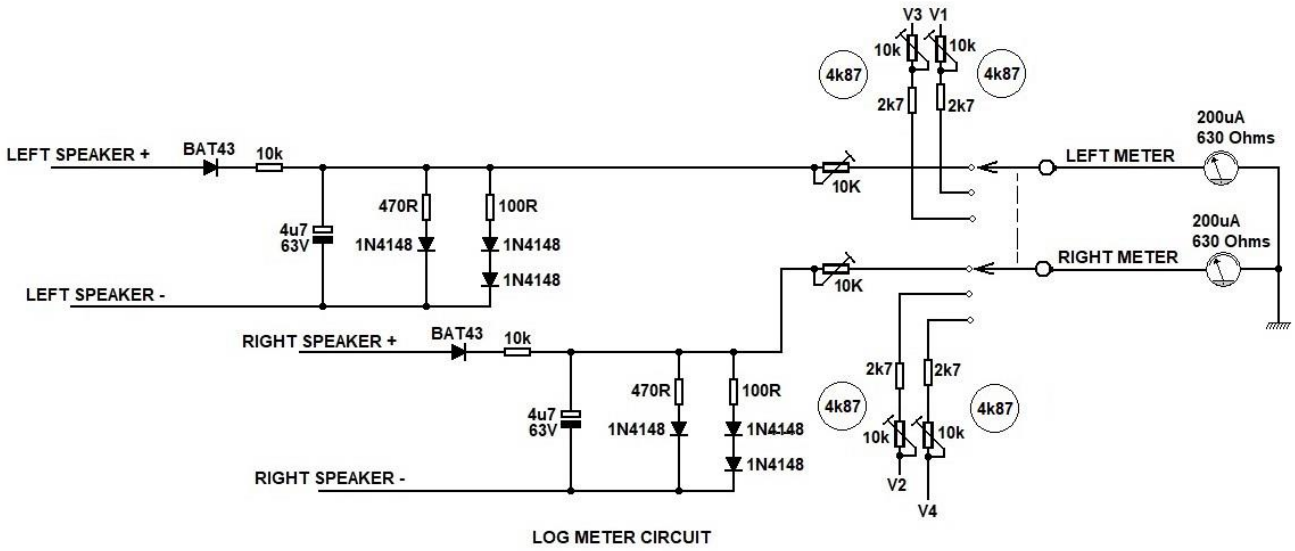

The 10k rheostats allow setting the meters for a decent level with low level signals yet the logarithmic effect of the 1N4148 diode strings should prevent meter overload with higher inputs.
The BAT43 Schottky diode (if still available) has a very low voltage loss across its junction.
As they state, the resistor values may need adjusting, **'One has to use the diode characteristic exponential function, but equations get complicated and unable to solve with just a pencil and a piece of paper. Fortunately, free SPICE software is available and the circuit can easily be simulated and a reasonable solution can be found by modifying the values of these to resistors until a suitable response is achieved.'**

The valve bias inputs will be around 500mV to 550mV and it is hoped to set the 10k rheostats to set the meters at either mid-scale or a point on the scale that makes an easy datum point. You don't need to now the actual voltage because you know that the datum point chosen is the correct voltage point.
At 0.55V for example, mid-scale on the meter would require a current of 100uA which across the 630 Ohms of the meter is 63mV. Therefore the external resistors need to drop 550mV- 63mV = 487mV and at 100uA equates to a resistance of 4,870 Ohms, as shown in the circles.
The network on each of the valve cathode voltage inputs can be varied between 2k7 and 12k7.This should give a minimum current of 0.55V / (12k7+ 630) = 41uA and a maximum current of 0.55V / (2k7+ 630) = 165uA. So setting to mid-scale with 0.55V input should be easy to achieve.

Anyway it looks like a good start for experimentation.

Had a chance to check THD on my 100B.
Triode Mode at 15W (Just before clipping) Left = 0.6% Right = 0.56%
U/L Mode at 32W (Just before clipping) Left = 0.68% Right = 0.68%

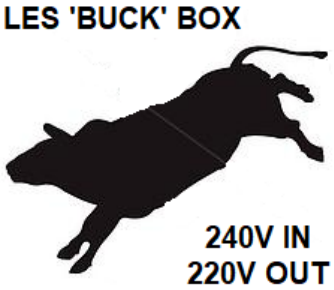

Buck Box!

This is a box to help 220V designed Chinese equipment to operate on the UK mains supply which can be between 240 – 250V.

http://g4cnh.com/public/Buck_Box.pdf

http://www.g4cnh.com/public/100B_With_Buck_transformer.mp4