So another Quad 405 comes in for some tender care, this one is a 405-2 with series 6 circuit boards.
It is very similar to the last 405 that I repaired; I just had to add R18 to the photo I had taken before.

A visual gave away some clues as to what I had to expect, this for reference, is the Right channel.

Both 4A supply fuses Blown.

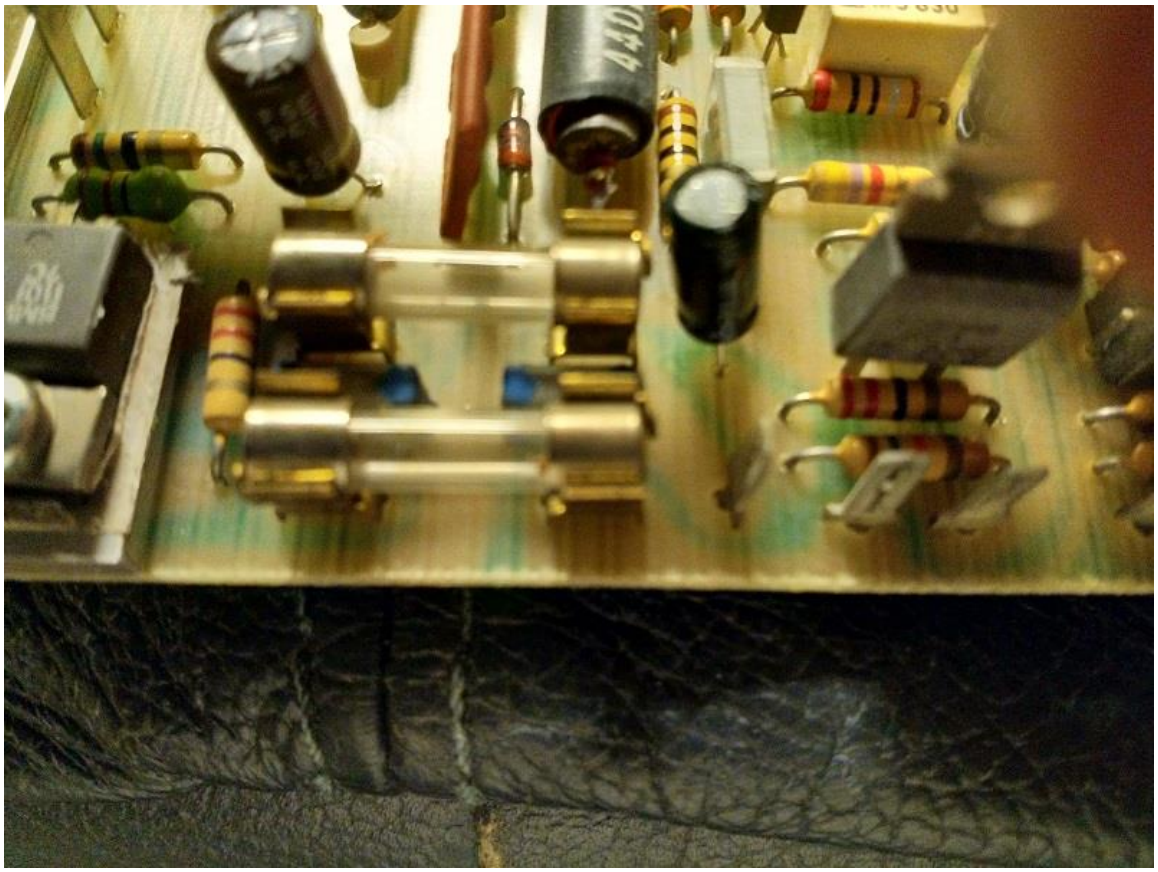

C18 case cracked

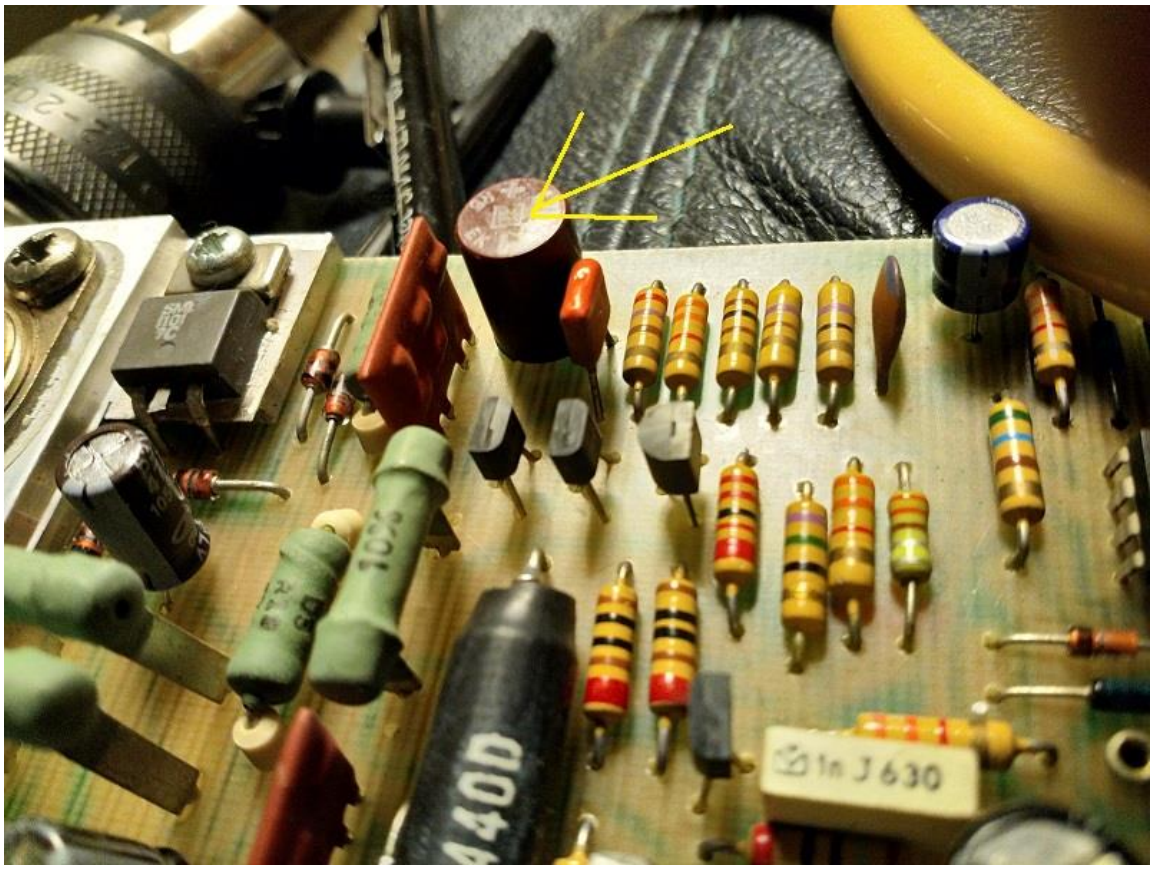

Signs of overheating around the Op-Amp IC1.

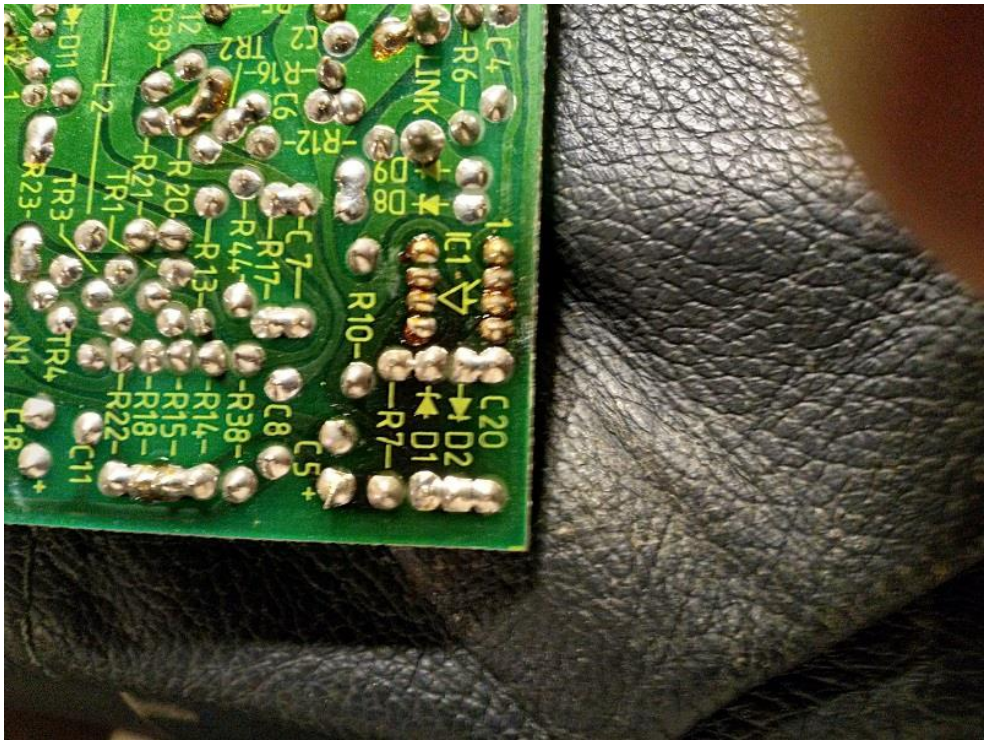

Just for reference, a photo showing the edge connections on the faulty board.

My attempt at drawing a schematic of the Rev 06 model.

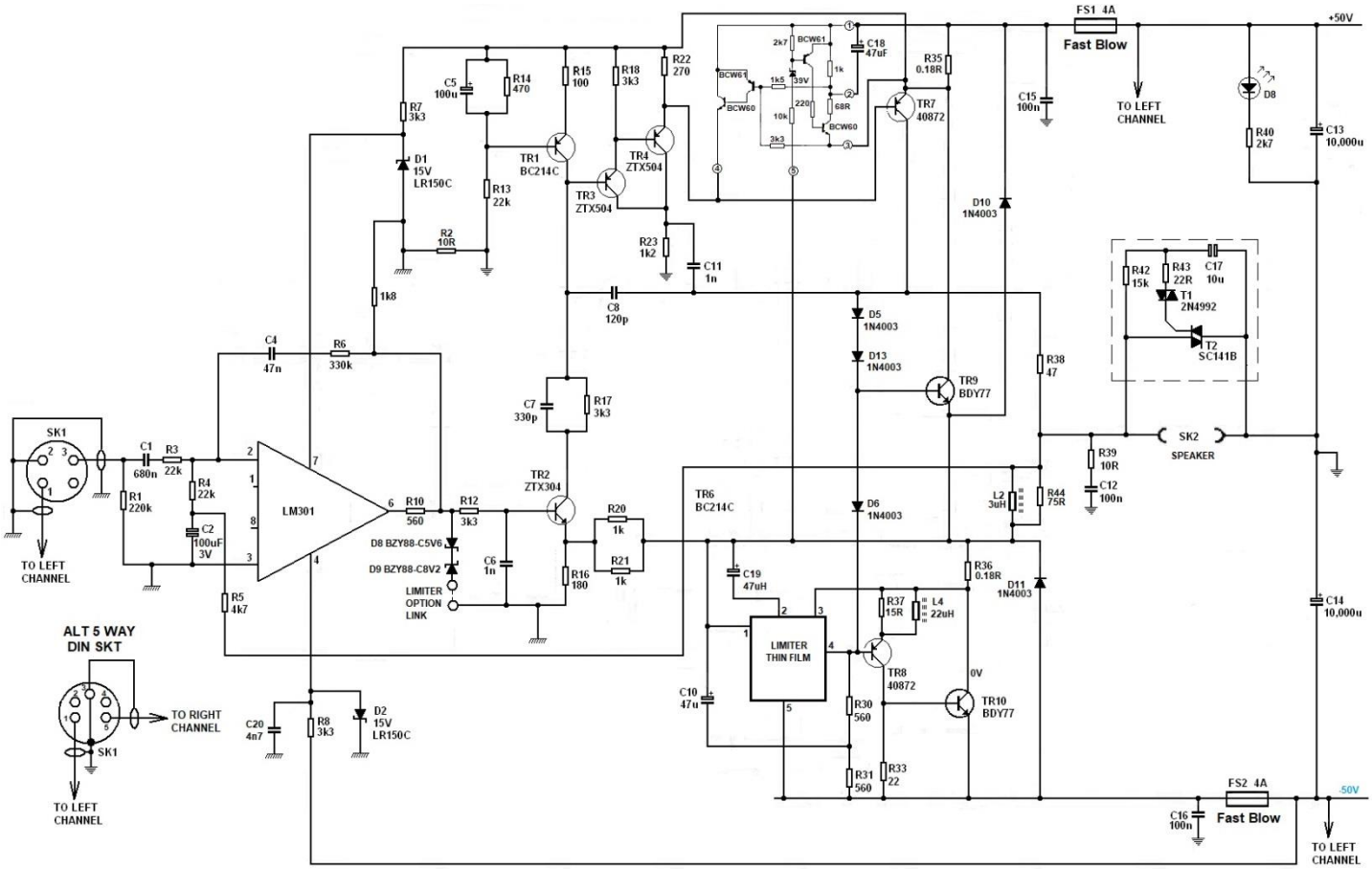

This is the original

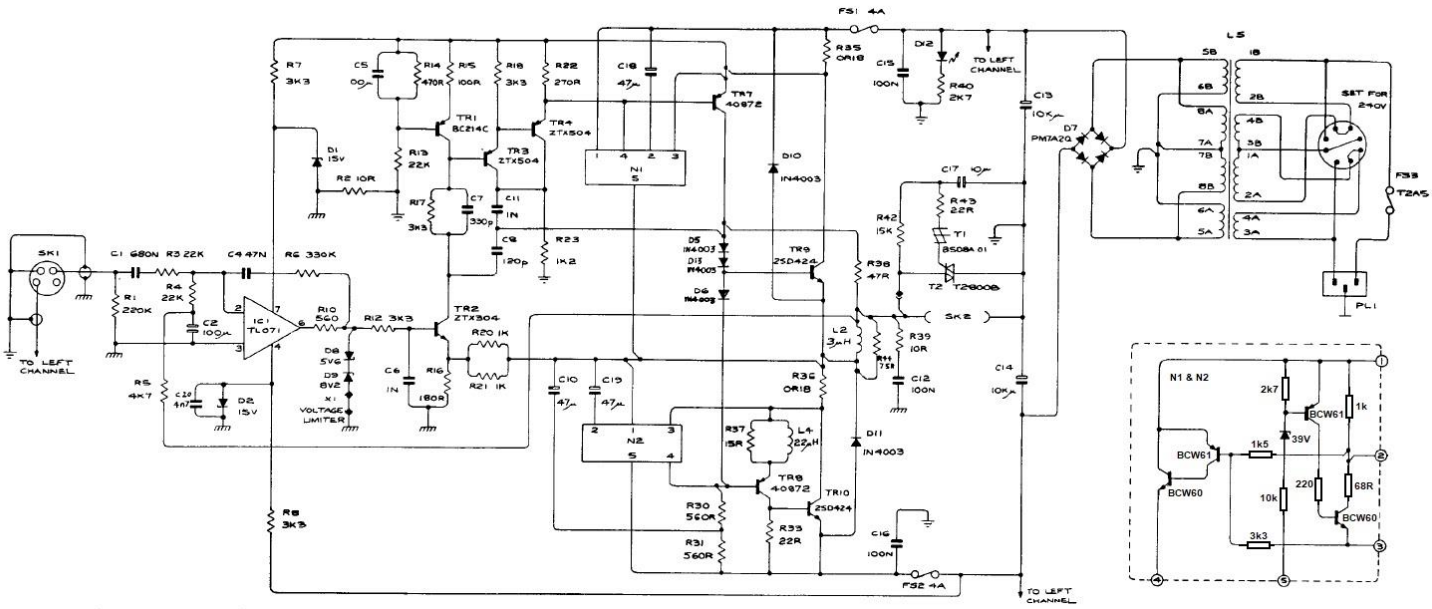

I decided to start by listing all of the parts on the board and attempted to test everything. Of course some of the results were affected by suspected short circuit semiconductors. With respect to these, I found it necessary to find alternatives where manufacture of originals has long passed.

TR1 BC214C alt BC559C, BC560C or BC415C
TR2 ZTX304 alt MPSA06 or 2N5551
TR3/TR4 ZTX504 alt MPSA56 or 2N5401
TR7/TR8 40872 alt BD244C, TIP42C or 1C04 (PNP 100V 7A 40W)
TR9/TR10 2SD424 alt 17556, MJ15003 or MJ21194
T1 2N4992 alt BS08A
T2 SC141B alt BS7-02A , TIC226B, RCA T2800 or NTE5608

R7 3k3 was found open circuit and was probably responsible for the suspected death of all of the transistors while heat from R30 and R31 caused C10 to lose its capacitance, falling from 47uF to 11uF. C18 and C19, both 47uF, were also found to be low as also the 100uF capacitors C2 and C5.

It is hoped that the thick film circuits (W1153A) that employ 5 semiconductors are OK; it will be a shame to find these are also blown or short circuit after all of the work of replacing everything else has been done.
Their replacement may be impossible so a much larger version using standard components may have to be undertaken.

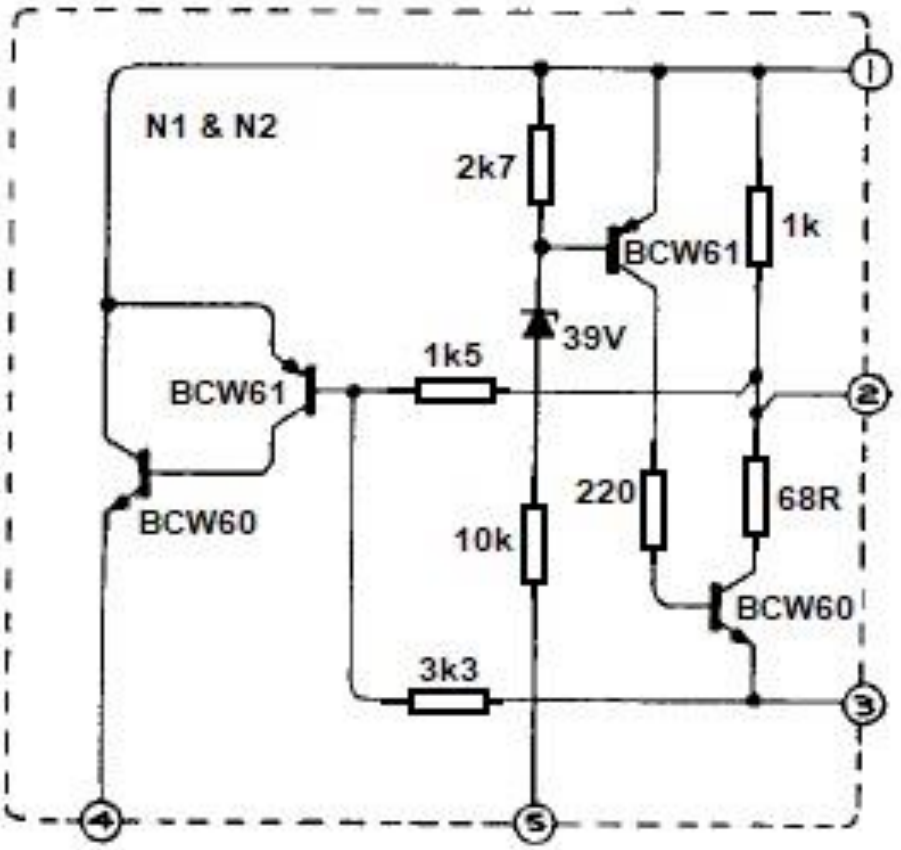

The BCW60 and BCW61 are surface mount types as I suspect the rest of the components are.
Apart from insufficient eyesight, I have no SMD working tools so any form of reconstruction will have to be done on standard matrix board. I hope I can find a way to test these though it may be difficult.

I was successful in attempting to source new thick film circuits; the following was to be a plan B.
This is where I acquired the replacement thick films.

IAG Service department,
Units 13/14 Glebe Road,
St Peters Industrial Estate,
Huntingdon,
Cambridgeshire PE29 7DL
Telephone : 01480 452561

PLAN B!

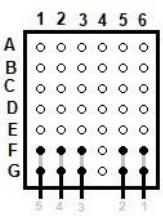

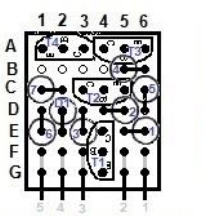

PART PLACEMENT

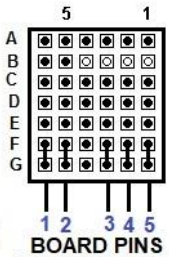

BOARD PINS
SOLDERED PADS

ROW 1 WIRING

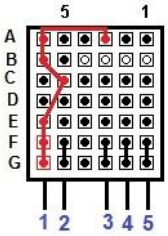

ROW 2 WIRING

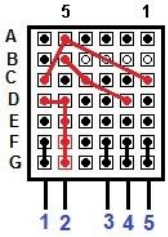

ROW 3 WIRING

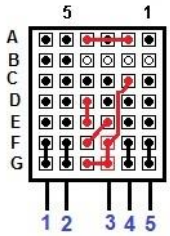

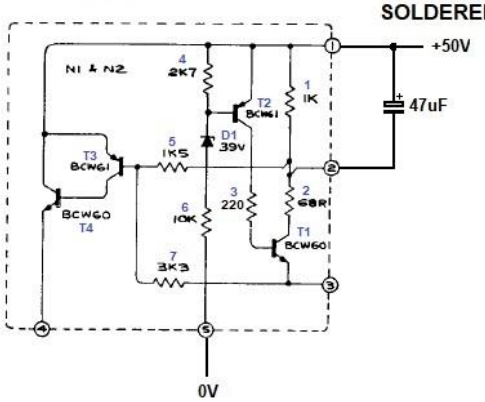

ROW 4 WIRING

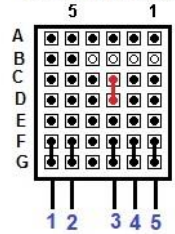

ROW 5 WIRING

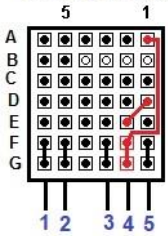

ROW 6 WIRING

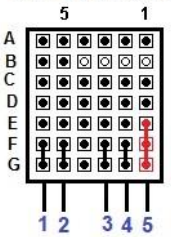

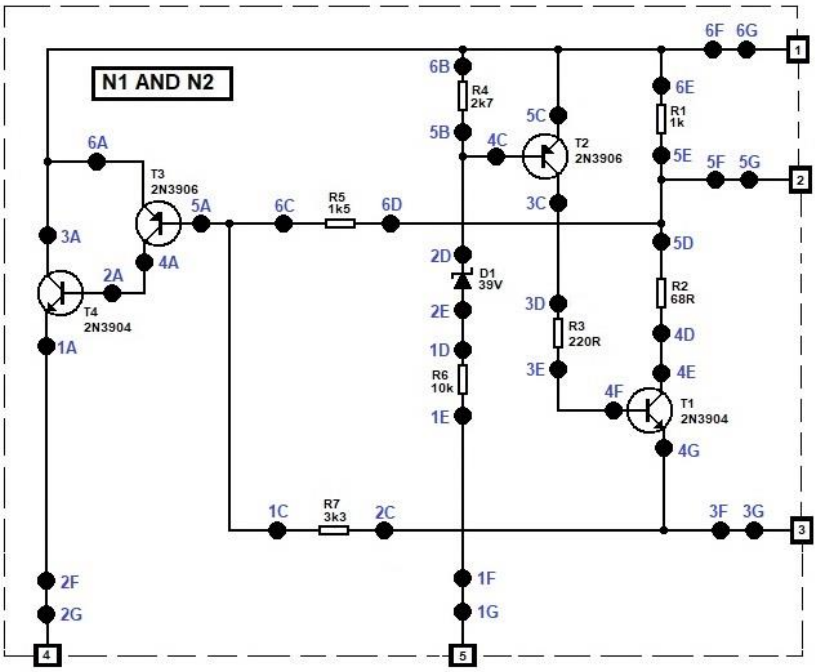

PLAN B - PUTS PARTS ON OPPOSITE SIDE.

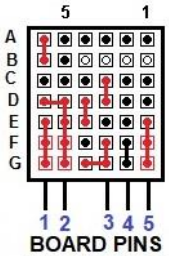

BOARD PINS
LINKS ONLY

It has to be made very small to fit into the available space. I need to acquire some isolated pad board then get the parts and some very fine linking wire. ☹ Thought my Pin and Wire days were over.

Suggested build is to fit all components as shown above in <u>part placement</u>, hopefully there is more room than indicated! Wire for pins can be 20 SWG tinned copper such as RS 355-063. Note how it is threaded from component side then routed back (Pads F & G) to give good support and prevent pad lift.

13 Short links can be made using solder at:-

6A to 6B,	6E to 6F,	6F to 6G,	6D to 5D,	5D to 5E,	5E to 5F,
5F to 5G,	4D to 4E,	4G to 3G,	3G to 3F,	3C to 3D,	1E to 1F,
1F to 1G.					

13 Fine wire links can now be added at:-

6A to 3A,	6B to 5C,	5C to 6E,	6C to 5A,	5A to 1C,	5B to 4C,
4C to 2D,	4A to 2A,	4F to 3E,	3F to 2C,	2E to 1D,	1A to 2F,
2F to 2G.					

Full 26 link pattern is thus, reversed traces in Grey:-

1A	2F	2G				
1B	NOT USED					
1C	5A	6C				
1D	2E					
1E	1F	1G				
1F Module Pin 5	1G	1E				
1G Module Pin 5	1F	1E				
2A	4A					
2B	NOT USED					
2C	4G	3F	3G			
2D	4C	5B				
2E	1D					
2F Module Pin 4	2G	1A				
2G Module Pin 4	2F	1A				
3A	5C	6A	6B	6E	6F	6G
3B	NOT USED					
3C	3D					
3D	3C					
3E	4F					
3F Module Pin 3	3G	2C	4G			
3G Module Pin 3	3F	2C	4G			
4A	2A					
4B	NOT USED					
4C	2D	5B				
4D	4E					
4E	4D					
4F	3E					
4G	2C	3F	3G			
5A	1C	6C				
5B	2D	4C				
5C	3A	6A	6B	6E	6F	6G
5D	5E	5F	5G	6D		
5E	5D	5F	5G	6D		
5F Module Pin 2	5G	5D	5E	6D		
5G Module Pin 2	5F	5D	5E	6D		
6A	3A	5C	6B	6E	6F	6G
6B	3A	5C	6A	6E	6F	6G
6C	1C	5A				
6D	5E	5D	5F/5G			
6E	3A	5C	6A	6B	6F	6G
6F Module Pin 1	6G	3A	5C	6A	6B	6E
6G Module Pin 1	6F	3A	5C	6A	6B	6E

Due to space limitations, the initial design had to be reversed so that components face the rear of the board and not the front. As the trip to Quad in Huntington was fruitful in obtaining some thick films; a simple resistance check shows that one of the originals definitely has a fault.
In years to come the parts from Quad may be unavailable and this work will then perhaps be found to be useful. My home made effort measured OK though it was a nightmare to fit the fine copper wires with my shaking hands, the lower resistance associated with pin 5 is due I think to the Zener diode I used.

The following picture shows my matrix board design and the two new Thick Film circuits, followed by the resistance tests that were made.

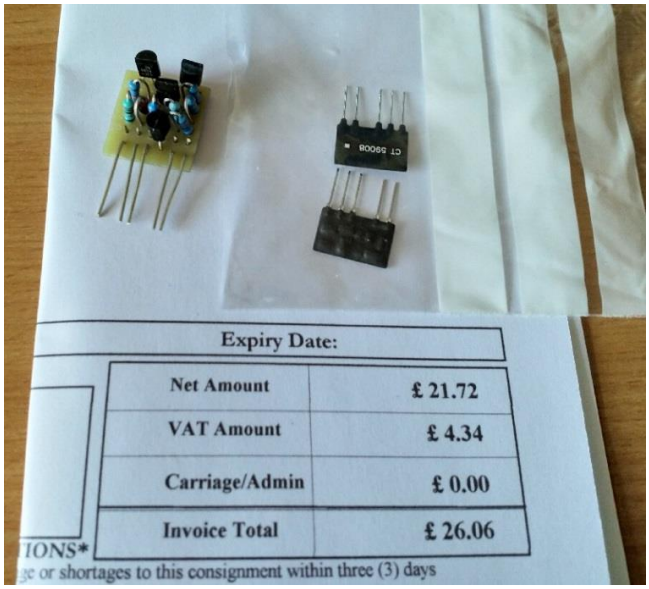

Test Points +/-	Home made	New 1	New 2	Old 1	Old 2
1-2	994	997	999	994	997
1-3	5.8k	5.79k	5.79k	5.82k	5.81k
1-4	inf	inf	inf	inf	**96k**
1-5	17 Meg	inf	35 Meg	24 Meg	25.9 Meg
2-3	4.8k	4.79k	4.8k	4.83k	4.8k
2-4	inf	inf	inf	inf	**97.7k**
2-5	17 Meg	inf	33.7 Meg	24.8 Meg	25.9 Meg
3-4	inf	inf	inf	inf	**103.5k**
3-5	17 Meg	inf	33.7 Meg	25 Meg	25.9 Meg
4-5	inf	inf	inf	inf	25.9 Meg
Test Points -/+	**Home made**	**New 1**	**New 2**	**Old 1**	**Old 2**
1-2	994	997	999	995	1k
1-3	5.8k	5.79k	5.79k	5.82k	5.81k
1-4	inf	inf	inf	inf	**167k**
1-5	inf	inf	inf	inf	inf
2-3	4.8k	4.8k	4.8k	4.83k	4.81k
2-4	inf	inf	inf	inf	**168k**
2-5	inf	inf	inf	inf	inf
3-4	inf	inf	inf	inf	**174k**
3-5	inf	inf	inf	inf	inf
4-5	inf	inf	inf	inf	inf
					SUSPECT T3 or T4

So things to do are:-

1) Replace the dodgy 3k3 resistor R7.
2) Fit 8 pin socket and new op-amp.
3) Replace C10 and C18 plus others if needed.
4) Test out the output clamp circuit.
5) Replace output transistors and their drivers.
6) Test and replace TR1 to TR4 if necessary.
7) Fit new 4A Fast Blow fuses FS1 and FS2.
8) Fit new thick film circuits.

Actions:

1) Resistor R7 replaced but as this type of resistor fails open circuit it was decided to replace all five of this type on the board.
2) Socket fitted and a zip tie used to retain the replacement TL071 in its socket.
3) All electrolytic capacitors replaced.
4) Testing the Clamp Circuit.
   Removed the solder link as shown below which isolated the clamp circuit from the rest of the board. A test wire was soldered to the pad as shown and a power supply (initially set to zero volts), was connected to this wire via a 100 Ohm limiting resistor and an Ammeter. The 0V of the power supply was connected to circuit Ground.

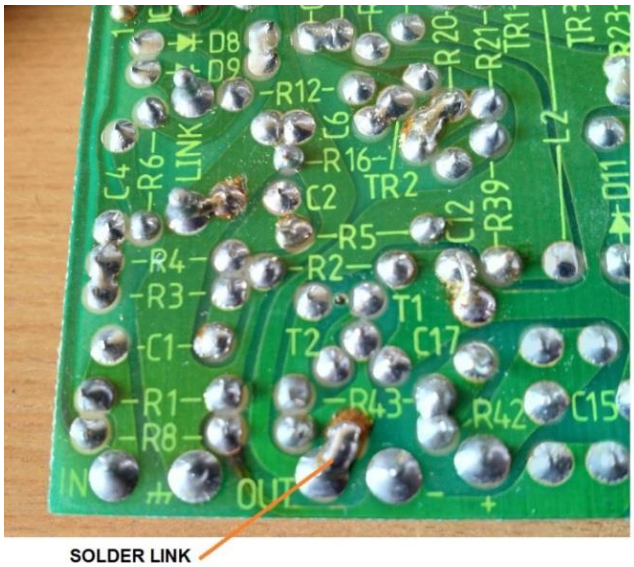

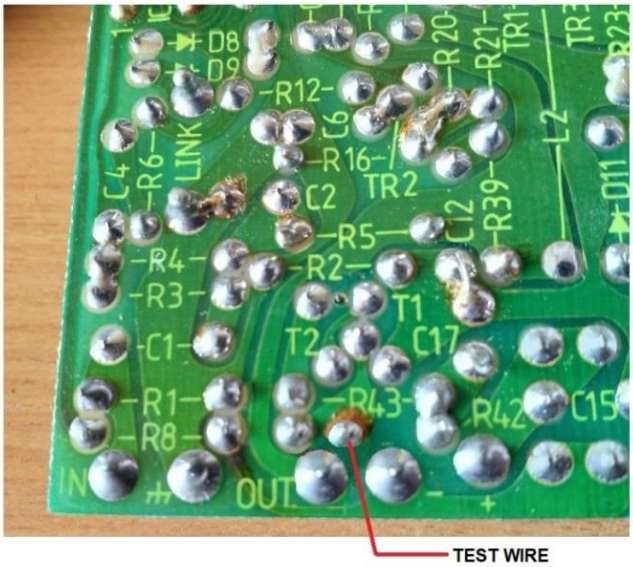

Power supply was slowly advanced towards 6V to check that the current drawn was no greater than 0.5mA.
High current however was drawn at just 1V which was a failure so the Triac was replaced, after this the circuit drew no current until the Diac conducted at around 10V which is what it should do.
Circuit was checked again with reverse polarity and operated correctly.

5) Replaced output transistors (MJ15003 as recommended) and their PNP drivers these now being type 1C04, a good 40872 equivalent with 100V, 7 Amp, 40 W ratings. Also the fixing hardware had to be replaced as the old nuts and bolts were oxidised and being in the signal path likely to cause excessive voltage drop when high current flowed.
6) TR1 to TR4 all tested OK which was a surprise.
7) New 4A Fast Blow fuses fitted to FS1 and FS2.
8) New thick film circuits fitted. Many thanks to IAG Service department for excellent personal service.

The 4 Pin input DIN connector appears faulty in as much as the plug can be inserted in a number of ways. This was replaced with a new 5 Pin DIN plug and the wiring appears on upper half of page 4.
This is a better quality DIN plug and socket which also has a retaining ring for security.

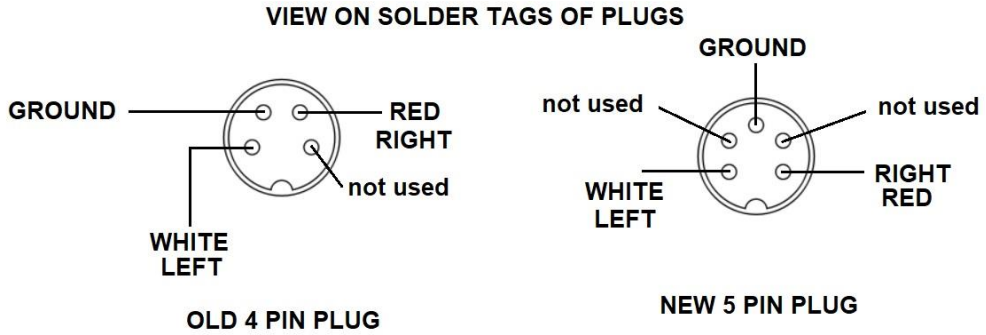

Washed and ready for Test

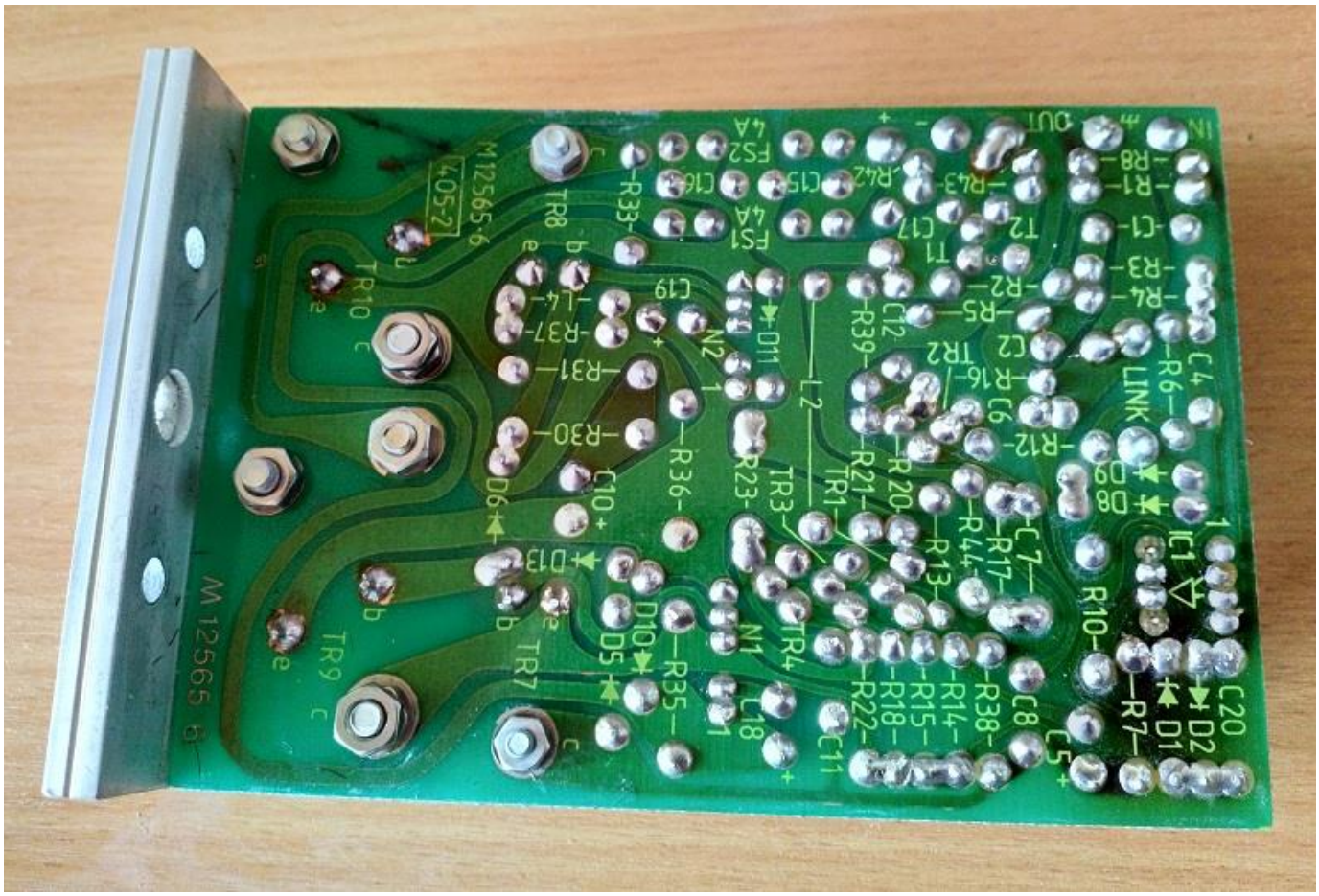

For those without a Variac, testing is a real Heart in the Mouth moment. Fortunately I have a Variac and I was able to raise the power input VERY slowly whilst monitoring the all-important DC level at the speaker sockets. These were loaded with high power 8 Ohm non-inductive loads and monitored by a dual channel oscilloscope. All looked well so a 1 kHz low distortion sine wave was applied and outputs checked for obvious distortion.

Everything looked fine, no crazy offset voltages on the outputs and they can be pushed to well over 40 Watts.
I compared the distortion of the repaired channel (Right) with the good working Left channel.
Both channels show 0.05% at near maximum output so I consider this to be good.

LEFT CHANNEL (Working original)

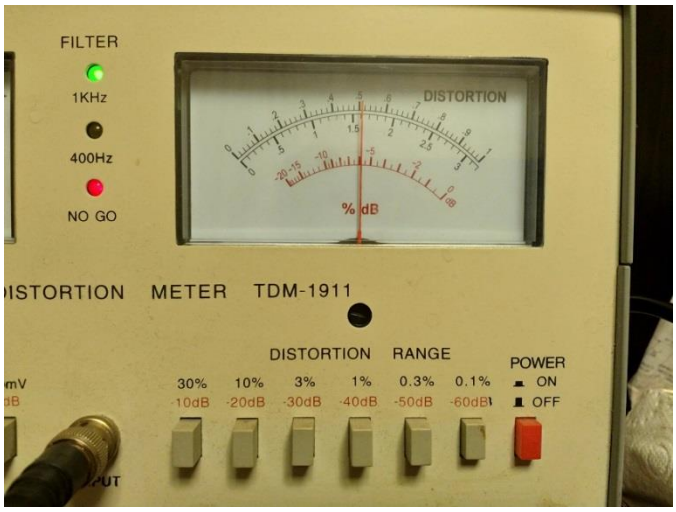

RIGHT CHANNEL (Repaired)

Don't be put off by the Red NO GO lamp; it is in its dim condition as it sees a suitable input signal.
Below are two pictures, the right hand shows the lamp difference when the signal input is insufficient.

Final Tests.

Offsets measured as 0.7mV and 0.8mV and a square wave test looked good.